DIODES, MICROWAVE, SILICON, PIN,

BASED ON PLANAR TYPES BXY43C AND BXY44K

ESCC Detail Specification No. 5513/030

ISSUE 1

October 2002

Document Custodian: European Space Agency - see https://escies.org

LEGAL DISCLAIMER AND COPYRIGHT

european space agency
agence spatiale européenne

Pages 1 to 21

DIODES, MICROWAVE, SILICON, PIN,

BASED ON PLANAR TYPES BXY43C AND BXY44K

ESA/SCC Detail Specification No. 5513/030

SCC

space components
coordination group

Issue/Rev.	Date	Approved by	
		SCCG Chairman	ESA Director General or his Deputy
Issue 1	May 1996		
Revision 'A'	September 1996		
Revision 'B'	June 1997		

DOCUMENTATION CHANGE NOTICE

Rev. Letter	Rev. Date	Reference	CHANGE Item	Approved DCR No.
'A'	Sept. '96	P1. Cover Page P2. DCN P15. Table 2 a.c.	 : No. 5, Min. Limit for Variant 08 corrected to "700"	None None 23827
'B'	June '97	P1. Cover Page P2. DCN P15. Table 2 d.c. P16. Table 3 P18. Table 4 P21. Table 6	 : No. 1, Reverse Voltage measurement replaced by Reverse Current measurement : No. 2, Characteristic and Symbol amended : No. 2, Characteristic and Symbol amended : No. 2, Characteristic and Symbol amended : No. 1, Characteristic, Symbol and Unit amended : No. 2, Characteristic amended	None None 221398 221398 221398 221398 221398 221398

TABLE OF CONTENTS

Page

TABLES

FIGURES

APPENDICES (Applicable to specific Manufacturers only)
None.

1. GENERAL

1.1 SCOPE

This specification details the ratings, physical and electrical characteristics, test and inspection data for a Diode, Microwave, Silicon, PIN, based on Planar Types BXY43C and BXY44K. It shall be read in conjunction with ESA/SCC Generic Specification No. 5010, the requirements of which are supplemented herein.

1.2 COMPONENT TYPE VARIANTS

Variants of the basic diodes specified herein, which are also covered by this specification, are given in Table 1(a).

1.3 MAXIMUM RATINGS

The maximum ratings, which shall not be exceeded at any time during use or storage, applicable to the diodes specified herein, are as scheduled in Table 1(b).

1.4 PARAMETER DERATING INFORMATION

The derating information applicable to the diodes specified herein, is shown in Figure 1.

1.5 PHYSICAL DIMENSIONS

The physical dimensions of the diodes specified herein are shown in Figure 2.

1.6 FUNCTIONAL DIAGRAM

The functional diagram, showing lead identification, of the diodes specified herein, is shown in Figure 3.

1.7 HANDLING PRECAUTIONS

These devices are susceptible to damage by electrostatic discharge. Therefore, suitable precautions shall be employed for protection during all phases of manufacture, testing, packaging, shipment and any handling.

These components are Categorised as Class 1 with a Minimum Critical Path Failure Voltage of 550V for Variants 01 to 04 and Class 2 with a Minimum Critical Path Failure Voltage of 1.2kV for Variants 05 to 08.

2. APPLICABLE DOCUMENTS

The following documents form part of this specification and shall be read in conjunction with it:-

(a) ESA/SCC Generic Specification No. 5010 for Discrete Microwave Semiconductor Components.

(b) MIL-STD-750, Test Methods and Procedures for Semiconductor Devices.

3. TERMS, DEFINITIONS, ABBREVIATIONS, SYMBOLS AND UNITS

For the purpose of this specification, the terms, definitions, abbreviations, symbols and units specified in ESA/SCC Basic Specification No. 21300 shall apply.

TABLE 1(a) - TYPE VARIANTS

VARIANT	BASED ON TYPE	FIGURE	TERMINAL/LEAD MATERIAL AND FINISH
01	BXY43C	2(a)	Cathode = D2, Anode = E2
02	BXY43C	2(b)	E2
03	BXY43C	2(c)	D2
04	BXY43C	2(d)	D2
05	BXY44K	2(a)	Cathode = D2, Anode = E2
06	BXY44K	2(b)	E2
07	BXY44K	2(e)	Cathode = D2, Anode = E2
08	BXY44K	2(d)	D2

TABLE 1(b) - MAXIMUM RATINGS

No.	CHARACTERISTICS	SYMBOL	MAXIMUM RATING	UNIT	REMARKS
1	D.C. Reverse Voltage Variants 01 to 04 Variants 05 to 08	V_R	 – 150 – 200	V	-
2	Forward Current (Continuous)	I_F	400	mA	-
3	Power Dissipation	P_D	500	mW	Note 1
4	Operating Temperature Range	T_{op}	– 55 to + 150	°C	T_{case}
5	Storage Temperature Range	T_{stg}	– 65 to + 175	°C	-
6	Soldering Temperature	T_{sol}	+ 235	°C	Note 2
7	Junction Temperature	T_J	+ 175	°C	-
8	Thermal Resistance (Junction to Case) Variant 01 Variant 02 Variant 03 Variant 04 Variant 05 Variant 06 Variant 07 Variant 08	$R_{TH(J-C)}$	 100 125 90 100 110 140 110 110	°C/W	I_F = 1.0mA

NOTES

1. For derating, see Figure 1.
2. Duration 5 seconds maximum and the same termination shall not be resoldered until 5 minutes have elapsed.

FIGURE 1 - PARAMETER DERATING INFORMATION

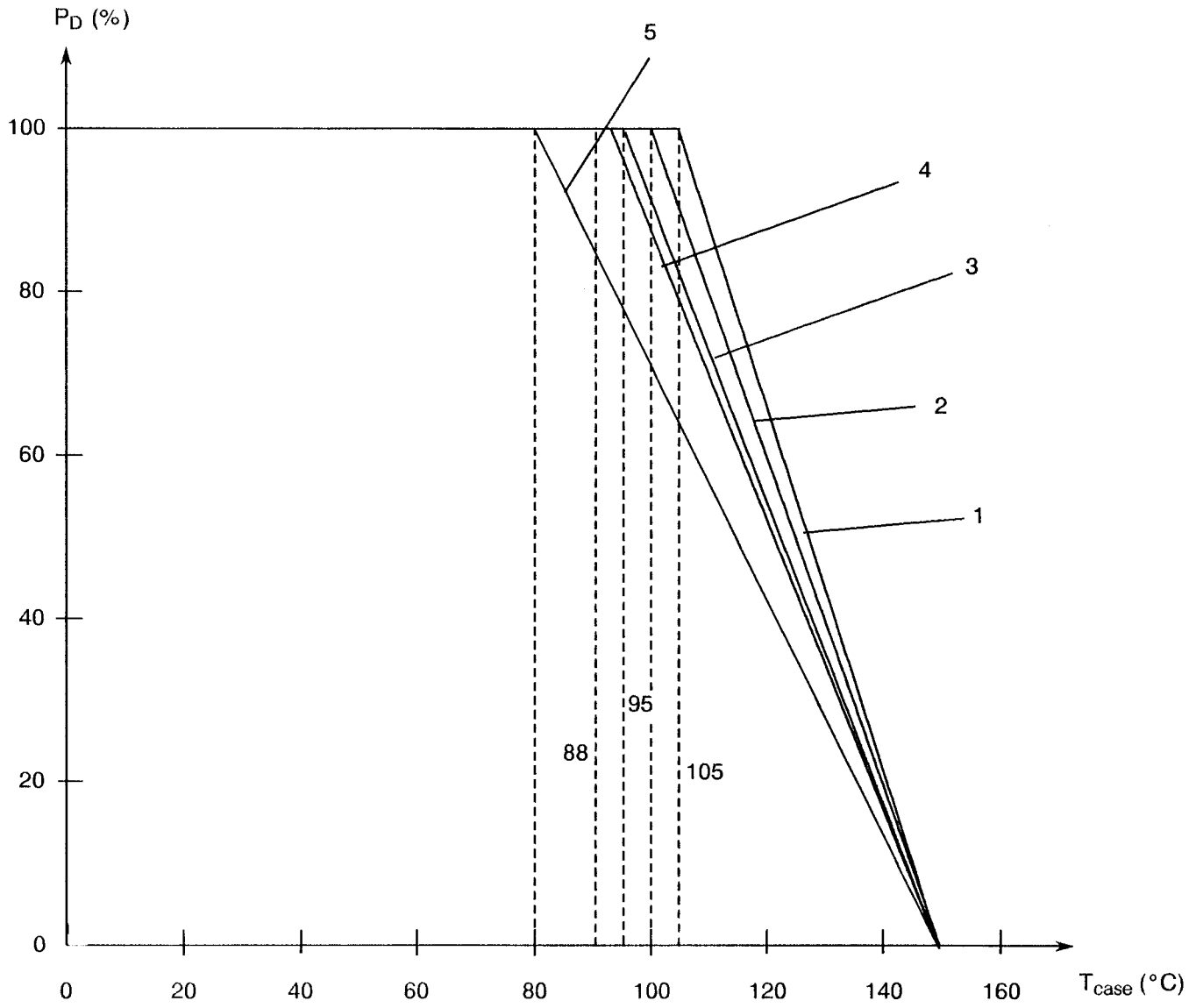

Power Dissipation versus Temperature

NOTES

1. Curve 1 for Variant 03.
2. Curve 2 for Variants 01 and 04.
3. Curve 3 for Variants 05, 07 and 08.
4. Curve 4 for Variant 02.
5. Curve 5 for Variant 06.

FIGURE 2 - PHYSICAL DIMENSIONS

FIGURE 2(a) - VARIANTS 01 AND 05

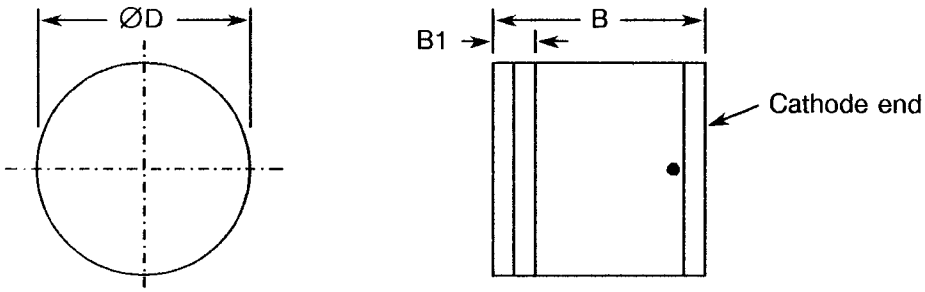

SYMBOL	MILLIMETRES	
	MIN.	MAX.
B	1.15	1.35
B1	-	0.40
ØD	1.30	1.45

FIGURE 2(b) - VARIANTS 02 AND 06

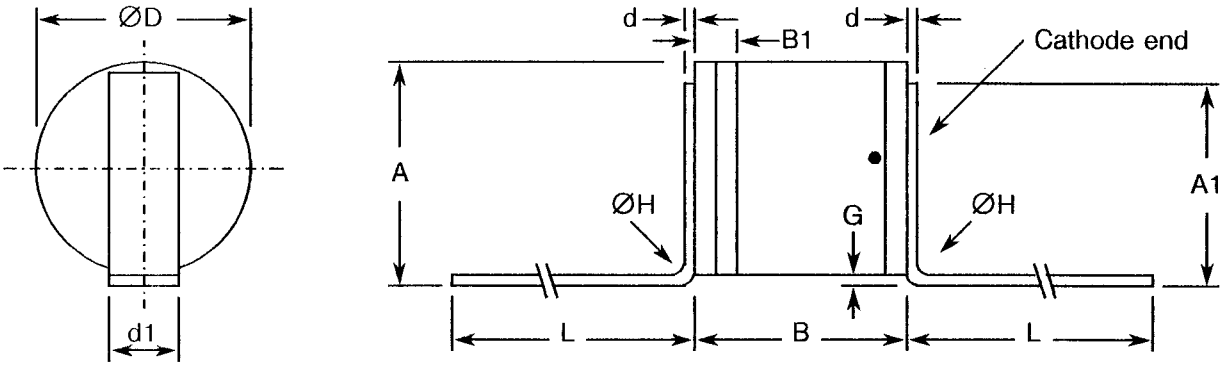

SYMBOL	MILLIMETRES	
	MIN.	MAX.
A	1.40	1.95
A1	1.05	1.25
B	1.15	1.35
B1	-	0.40
d	0.06	0.10
d1	0.40	0.60
ØD	1.30	1.45
G	0.10	0.50
ØH	-	0.30
L	5.50	-

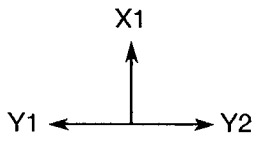

FIGURE 2 - PHYSICAL DIMENSIONS (CONTINUED)

FIGURE 2(c) - VARIANT 03

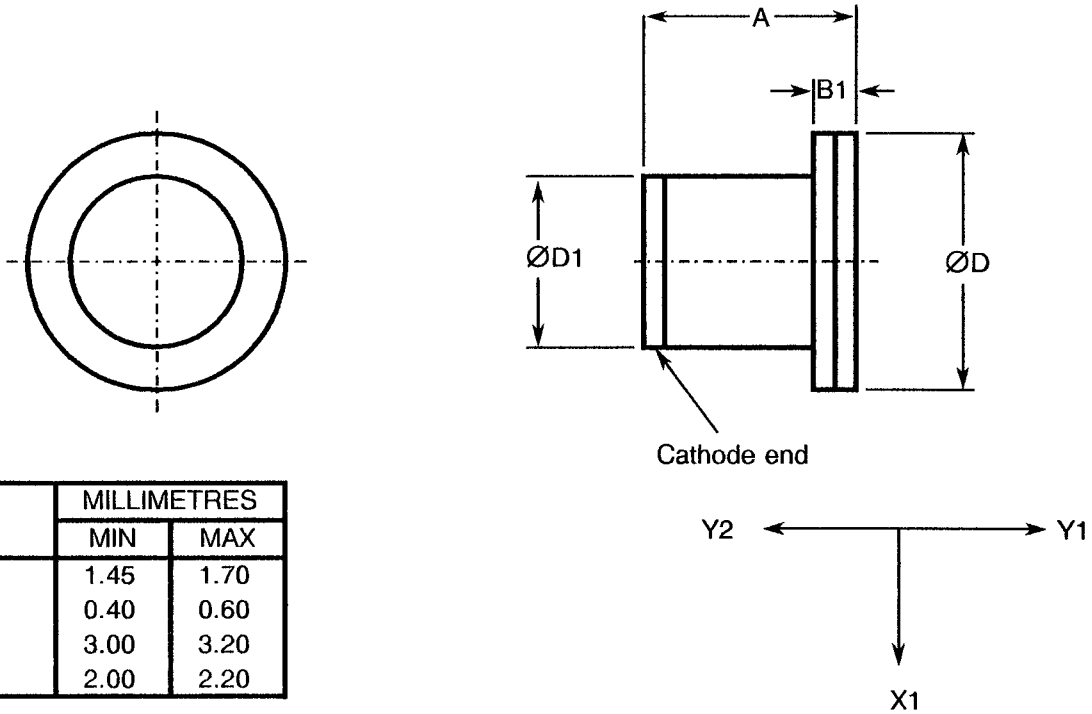

SYMBOL	MILLIMETRES	
	MIN	MAX
A	1.45	1.70
B1	0.40	0.60
ØD	3.00	3.20
ØD1	2.00	2.20

FIGURE 2(d) - VARIANTS 04 AND 08

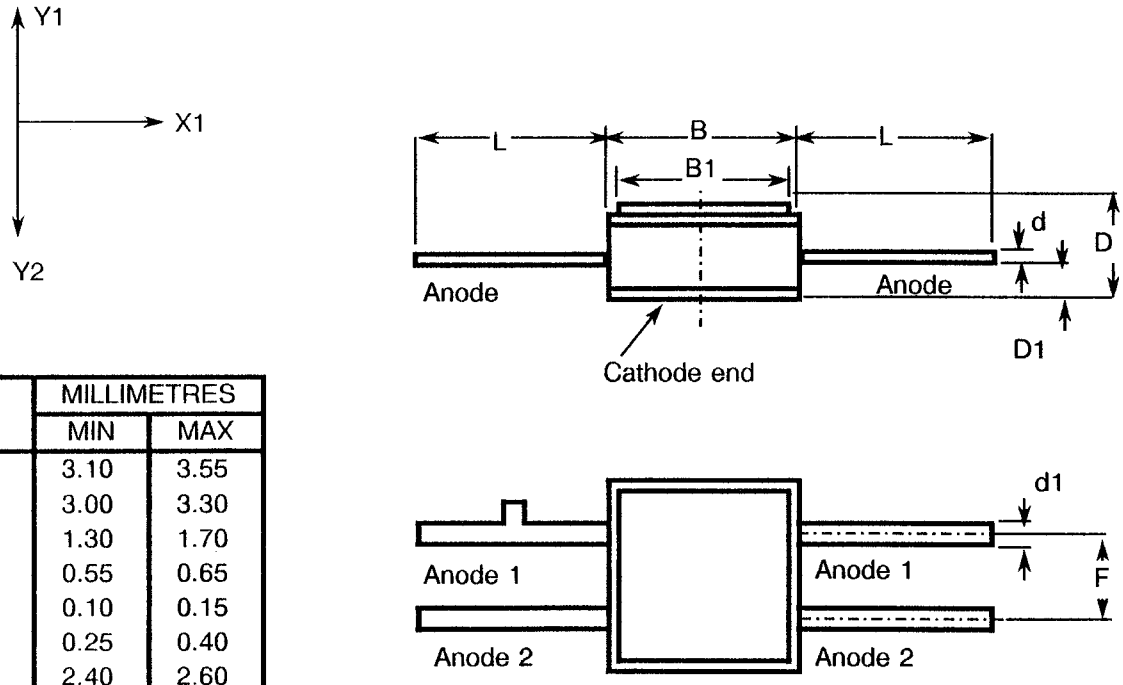

SYMBOL	MILLIMETRES	
	MIN	MAX
B	3.10	3.55
B1	3.00	3.30
D	1.30	1.70
D1	0.55	0.65
d	0.10	0.15
d1	0.25	0.40
F	2.40	2.60
L	5.50	-

FIGURE 2 - PHYSICAL DIMENSIONS (CONTINUED)

FIGURE 2(e) - VARIANT 07

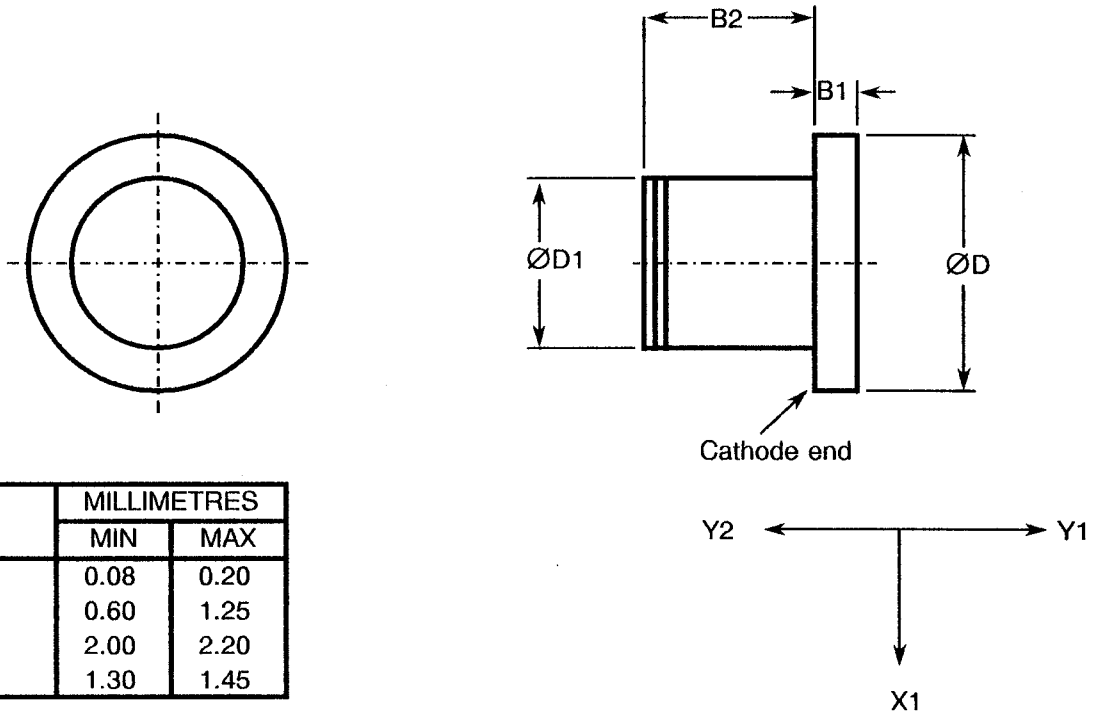

SYMBOL	MILLIMETRES	
	MIN	MAX
B1	0.08	0.20
B2	0.60	1.25
ØD	2.00	2.20
ØD1	1.30	1.45

FIGURE 3 - FUNCTIONAL DIAGRAM

VARIANTS 01 to 03 and 05 to 07

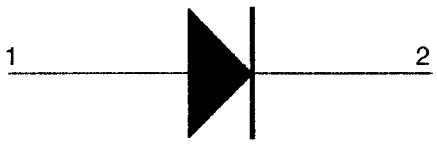

1. Anode.
2. Cathode.

VARIANTS 04 AND 08

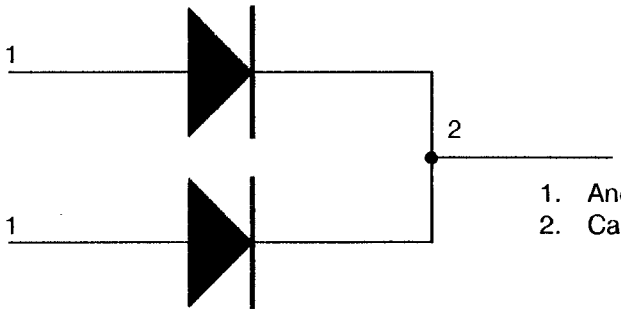

1. Anode.
2. Cathode.

NOTES

1. For Variants 01, 02, 05 and 06, the cathode end shall be marked with a black dot or band. The marking will not be on the cathode connection but adjacent to it.

4. REQUIREMENTS

4.1 GENERAL

The complete requirements for procurement of the diodes specified herein shall be as stated in this specification and ESA/SCC Generic Specification No. 5010 for Discrete Microwave Semiconductor Components. Deviations from the Generic Specification, applicable to this specification only, are listed in Para. 4.2.

Deviations from the applicable Generic Specification and this Detail Specification, formally agreed with specific Manufacturers on the basis that the alternative requirements are equivalent to the ESA/SCC requirements and do not affect the components' reliability, are listed in the appendices attached to this specification.

4.2 DEVIATIONS FROM GENERIC SPECIFICATION

4.2.1 Deviations from Special In-process Controls

(a) Para. 5.3, Wafer Lot Acceptance: Shall be performed as an S.E.M. Inspection only.

4.2.2 Deviations from Final Production Tests (Chart II)

(a) Para. 6.2, Pre-burn-in: Shall be performed for 168 hours with Conditions as per Table 5(b) of this specification.

(b) Para. 9.2.2, Die Shear: Forces need not be recorded and the residual die area shall be ≥50% of the original die size.

(c) Para. 9.6, Constant Acceleration: Shall not be performed.

(d) Para. 9.7, Particle Impact Noise Detection (PIND) test: May be performed at any point after its position in Chart II.

(e) Para. 9.14, Vibration, Variable Frequency: Shall not be performed.

4.2.3 Deviations from Burn-in and Electrical Measurements (Chart III)

(a) Para. 9.1.1, Initial Parameter Drift Value Measurements: Parameters measured in Chart II shall not be repeated during Electrical Measurements at Room Temperature.

(b) Para. 9.12, Radiographic Inspection: Shall be performed in X and Z axes only, exposure 100kV, duration 5 minutes.

4.2.4 Deviations from Qualification Tests (Chart IV)

(a) Para. 9.2.2, Die Shear: Forces need not be recorded and the residual die area shall be ≥50% of the original die size.

(b) Para. 9.13, Shock Test: Shall not be performed.

(c) Para. 9.14, Vibration Test: Shall not be performed.

(d) Para. 9.15, Constant Acceleration: Shall not be performed.

(e) Para. 9.20, Operating Life: Only one Operating Life Test shall be performed on 30 components.

(f) Para. 9.23, Special Testing: Shall not be performed.

4.2.5 Deviations from Lot Acceptance Tests (Chart V)

(a) Para. 9.13, Shock Test: Shall not be performed.

(b) Para. 9.14, Vibration Test: Shall not be performed.

(c) Para. 9.15, Constant Acceleration: Shall not be performed.

(d) Para. 9.20, Operating Life: Only one Operating Life Test shall be performed on 16 components.

(e) Para. 9.23, Special Testing: Shall not be performed.

4.3 MECHANICAL AND ENVIRONMENTAL REQUIREMENTS

4.3.1 Dimension Check

The dimensions of the diodes specified herein shall be checked. They shall conform to those shown in Figure 2.

4.3.2 Weight

The maximum weight of the diodes specified herein shall be 0.02 grammes for Variants 01, 02 and 05 to 07 and 0.1 grammes for Variants 03, 04 and 08.

4.3.3 Terminal Strength

The requirements for terminal strength testing are specified in Section 9 of ESA/SCC Generic Specification No. 5010. The test conditions shall be as follows:-

		Variants 02, 06	Variants 04, 08	Variants 04, 08
Test Condition	:	'A' (Tension)	'A' (Tension)	'F' (Bending Stress)
Force	:	1.22 Newtons	5.0 Newtons	2.0 Newtons
Duration	:	5.0 seconds	5.0 seconds	5.0 seconds
Distance to Case	:	-	-	>1.0mm
Angle	:	-	-	90°

4.4 MATERIALS AND FINISHES

The materials and finishes shall be as specified herein. Where a definite material is not specified, a material which will enable the diodes specified herein to meet the performance requirements of this specification shall be used. Acceptance or approval of any constituent material does not guarantee acceptance of the finished product.

4.4.1 Case

Metal - Ceramic.

4.4.2 Terminal and Lead Material and Finish

The terminal and lead materials and finishes shall be as specified in Table 1(a) of this specification, in accordance with the requirements of ESA/SCC Basic Specification No. 23500.

4.5 MARKING

4.5.1 General

The marking of all components delivered to this specification shall be in accordance with the requirements of ESA/SCC Basic Specification No. 21700 and the following paragraphs. When the component is too small to accommodate all of the marking specified, as much as space permits shall be marked and the marking information, in full, shall accompany the component in its primary package.

The information to be marked and the order of precedence, shall be as follows:-

(a) Cathode Identification.

(b) The SCC Component Number.

(c) Traceability Information.

4.5.2 Cathode Identification

Cathode identification shall be as shown in Figures 2 and 3 of this specification.

4.5.3 The SCC Component Number

Each component shall bear the SCC Component Number which shall be constituted and marked as follows:

551303001B

Detail Specification Number
Type Variant (see Table 1(a))
Testing Level (B or C, as applicable)

4.5.4 Traceability Information

Each component shall be marked in respect of traceability information as defined in ESA/SCC Basic Specification No. 21700.

4.6 ELECTRICAL MEASUREMENTS

4.6.1 Electrical Measurements at Room Temperature

The parameters to be measured at room temperature are scheduled in Table 2. Unless otherwise specified, the measurements shall be performed at $T_{amb} = +25 \pm 3$ °C.

4.6.2 Electrical Measurements at High and Low Temperatures

The parameters to be measured at high and low temperatures are scheduled in Table 3. Unless otherwise specified, the measurements shall be performed at $T_{amb} = +100\ (+0-5)$ °C.

4.6.3 Circuits for Electrical Measurements

Circuits for use in performing electrical measurements listed in Table 2 of this specification are shown in Figure 4.

4.7 BURN-IN TESTS

Burn-in shall be Category 3 of Chart III(a).

4.7.1 Parameter Drift Values

The parameter drift values applicable to burn-in are specified in Table 4 of this specification. Unless otherwise stated, measurements shall be performed at $T_{amb} + 25 \pm 3$ °C. The parameter drift values (Δ) applicable to the scheduled parameters shall not be exceeded. In addition to these drift value requirements for a given parameter, the appropriate limit value specified in Table 2 shall not be exceeded.

4.7.2 Conditions for High Temperature Reverse Bias Burn-in

The requirements for high temperature reverse bias burn-in are specified in Section 7 of ESA/SCC Generic Specification No. 5010. The conditions for high temperature reverse bias burn-in shall be as specified in Table 5(a) of this specification.

4.7.3 Electrical Circuit for High Temperature Reverse Bias Burn-in

The circuit for use in performing the H.T.R.B. burn-in tests is shown in Figure 5(a) of this specification.

4.7.4 Conditions for Power Burn-in

The requirements for power burn-in are specified in Section 7 of ESA/SCC Generic Specification No. 5010. The conditions for power burn-in shall be as specified in Table 5(b) of this specification.

4.7.5 Electrical Circuit for Power Burn-in

The circuit for use in performing the power burn-in tests is shown in Figure 5(b) of this specification.

TABLE 2 - ELECTRICAL MEASUREMENTS AT ROOM TEMPERATURE - D.C. PARAMETERS

No.	CHARACTERISTICS	SYMBOL	MIL-STD-750 TEST METHOD	TEST CONDITIONS	LIMITS		UNIT
					MIN.	MAX.	
1	Reverse Current 1	I_{R1}	4016	Variants 01 to 04 $V_R = -150V$ Variants 05 to 08 $V_R = -200V$	-	100	nA
2	Reverse Current 2	I_{R2}	4016	$V_R = -100V$ Variants 01 to 04 Variants 05 to 08	 - -	 10 5.0	nA
3	Forward Voltage	V_F	4011	$I_F = 100mA$ Variants 01 to 04 Variants 05 to 08	 - -	 1.0 1.05	V

TABLE 2 - ELECTRICAL MEASUREMENTS AT ROOM TEMPERATURE - A.C. PARAMETERS

No.	CHARACTERISTICS	SYMBOL	MIL-STD-750 TEST METHOD	TEST FIG.	TEST CONDITIONS	LIMITS		UNIT
						MIN.	MAX.	
4	Total Capacitance	C_T	4001	-	$V_R = -50V$ $f = 1.0MHz$ Variants 01, 02 Variant 03 Variant 04 Variants 05 to 07 Variant 08	 - 0.3 0.4 - -	 0.45 0.75 0.85 0.35 0.75	pF
5	Forward Resistance 1	r_{f1}	4056	-	$f = 100MHz$ $I_{F1} = 20\mu A$ Variants 01 to 04 $I_{F1} = 10\mu A$ Variants 05 to 07 Variant 08	 - 800 700	 70 1300 1200	Ω
6	Forward Resistance 2	r_{f2}	4056	-	$f = 100MHz$ $I_{F2} = 1.0mA$ Variants 01 to 04 Variants 05 to 07 Variant 08	 - 12 11	 3.0 28 27	Ω
7	Forward Resistance 3	r_{f3}	4056	-	$f = 100MHz$ $I_{F3} = 10mA$ Variants 01 to 04 Variants 05 to 08	 - 2.0	 1.5 5.0	Ω
8	Charge Carrier Lifetime	τ	-	4	$I_F = 10mA$ $I_R = -6.0mA$ Variants 01 to 04 Variants 05 to 08	 250 300	 - -	ns

TABLE 2 - ELECTRICAL MEASUREMENTS AT ROOM TEMPERATURE - A.C. PARAMETERS (CONT'D)

No.	CHARACTERISTICS	SYMBOL	MIL-STD-750 TEST METHOD	TEST FIG.	TEST CONDITIONS	LIMITS		UNIT
						MIN.	MAX.	
9	Difference in Forward Resistance 2	Δr_{f2}	4056	-	f = 100MHz I_{F2} = 1.0mA Notes 1, 2 and 3	-	15	%
10	Difference in Forward Resistance 3	Δr_{f3}	4056	-	f = 100MHz I_{F3} = 10mA Notes 1, 2 and 3	-	15	%

NOTES

1. These are matching parameters for Variant 04 only.
2. Measurements shall be performed during Chart III only and shall not be counted for P.D.A. calculation.
3. $\Delta R_f = 100 \times (R_{f\ Diode\ 2} - R_{f\ Diode\ 1} / R_{f\ Diode\ 1})\%$.

TABLE 3 - ELECTRICAL MEASUREMENTS AT HIGH AND LOW TEMPERATURES

No.	CHARACTERISTICS	SYMBOL	MIL-STD-750 TEST METHOD	TEST CONDITIONS	LIMITS		UNIT
					MIN.	MAX.	
2	Reverse Current 2	I_{R2}	4016	V_R = −100V	-	0.25	µA

FIGURE 4 - TEST CIRCUIT FOR CHARGE CARRIER LIFETIME MEASUREMENT

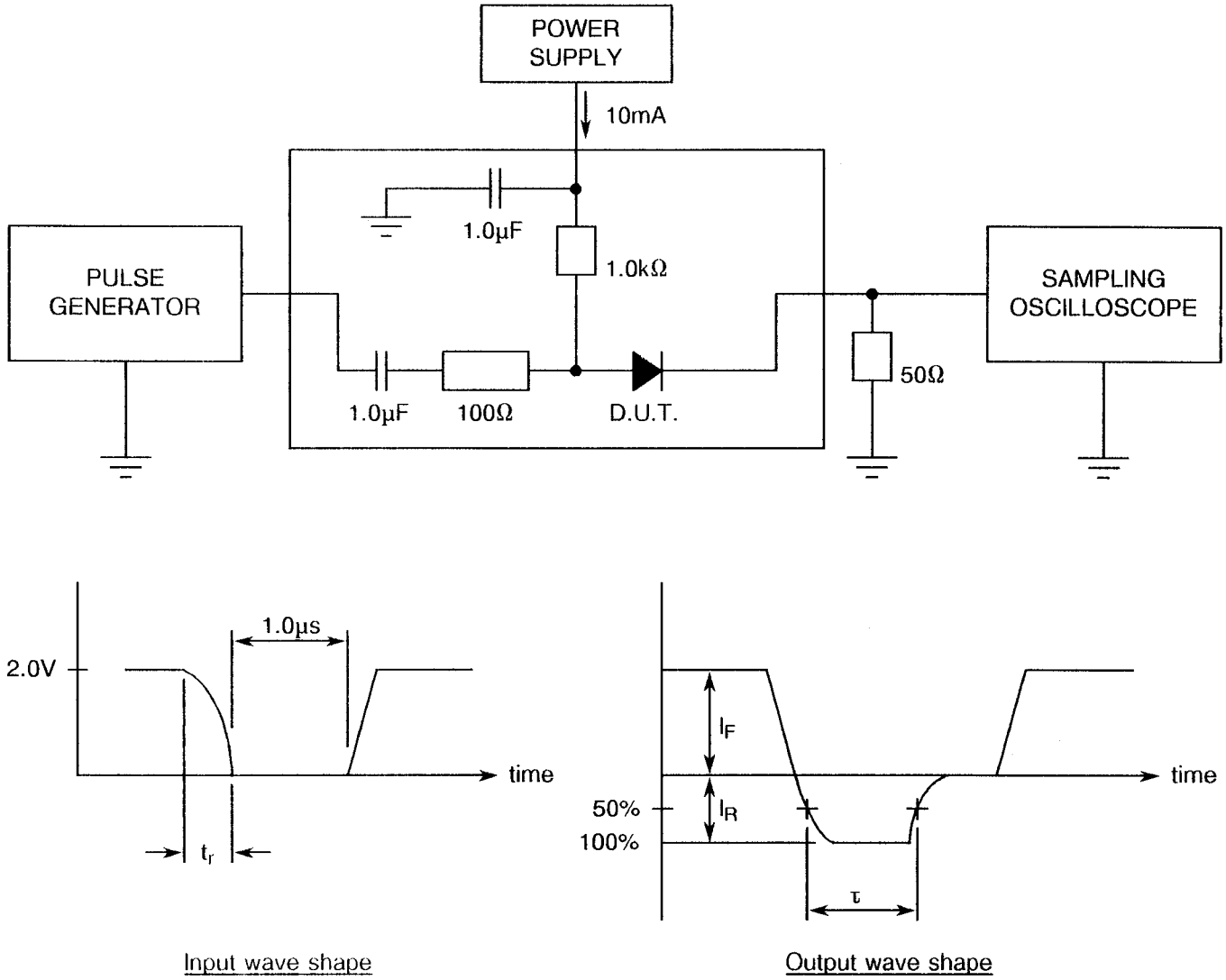

NOTES

1. The value of the reverse current I_R is −6.0mA and the forward current I_F is 10mA.
2. The lifetime (τ) is measured across the 50% points of the observed wave shape. The input pulse is provided by a pulse generator having a rise time of less than 5.0ns. The output pulse is amplified and observed on a sampling oscilloscope.
3. Pulse length: 1.0µs.
4. Duty cycle: ≤33%.

TABLE 4 - PARAMETER DRIFT VALUES

No.	CHARACTERISTICS	SYMBOL	SPEC. AND/OR TEST METHOD	TEST CONDITIONS	CHANGE LIMITS (Δ)	UNIT
2	Reverse Current 2	I_{R2}	As per Table 2	As per Table 2	±3.0 (1)	nA
3	Forward Voltage	V_F	As per Table 2	As per Table 2	±30 (1)	mV
6	Forward Resistance 2	r_{f2}	As per Table 2	As per Table 2	±15 (1)	%

NOTES

1. Δ1 = Δ2 = Δ3.

TABLE 5(a) - CONDITIONS FOR HIGH TEMPERATURE REVERSE BIAS BURN-IN

No.	CHARACTERISTICS	SYMBOL	CONDITIONS	UNIT
1	Ambient Temperature Variants 01 to 03 and 05 to 07 Variants 04 and 08	T_{amb}	 +150(+0−3) +135(+0−3)	°C
2	Reverse Voltage Variants 01 to 04 Variants 05 to 08	V_R	 −120 −160	V

NOTES

1. At the end of the H.T.R.B., T_{amb} shall be decreased to room temperature and the reverse bias shall remain applied until T_{amb} is less than +35°C.

TABLE 5(b) - CONDITIONS FOR POWER BURN-IN AND OPERATING LIFE TESTS

No.	CHARACTERISTICS	SYMBOL	CONDITIONS	UNIT
1	Ambient Temperature	T_{amb}	+140(+0−3)	°C
2	Power Dissipation Variant 01 and 04 Variant 02 Variant 03 Variants 05, 07 and 08 Variant 06	P_D	 90 65 100 80 50 Note 1	mW

NOTES

1. T_{amb} shall be controlled to achieve T_J = +150°C.

FIGURE 5(a) - ELECTRICAL CIRCUIT FOR HIGH TEMPERATURE REVERSE BIAS BURN-IN

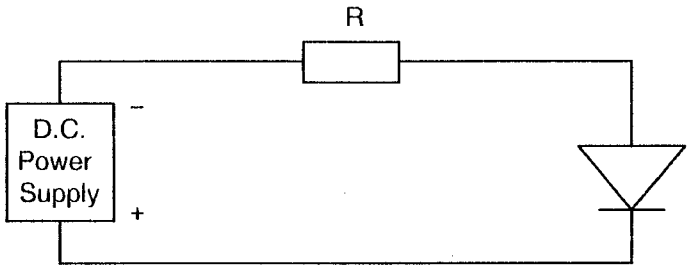

NOTES

1. R = 22kΩ

FIGURE 5(b) - ELECTRICAL CIRCUIT FOR POWER BURN-IN AND OPERATING LIFE TESTS

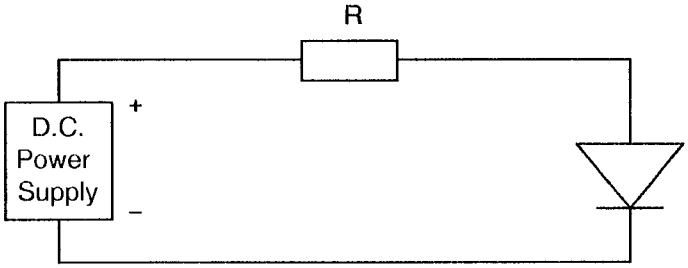

NOTES

1. R = 3.9Ω

4.8 ENVIRONMENTAL AND ENDURANCE TESTS (CHARTS IV AND V OF ESA/SCC GENERIC SPECIFICATION NO. 5010)

4.8.1 Electrical Measurements on Completion of Environmental Tests

The parameters to be measured on completion of environmental tests are scheduled in Table 2. Unless otherwise stated, the measurements shall be performed at $T_{amb} = +25 \pm 3$ °C.

4.8.2 Electrical Measurements at Intermediate Points and on Completion of Endurance Tests

The parameters to be measured at intermediate points and on completion of endurance tests are scheduled in Table 6. Unless otherwise stated, the measurements shall be performed at $T_{amb} = +25 \pm 3$ °C.

4.8.3 Conditions for Operating Life Tests (Part of Endurance Testing)

The requirements for operating life testing are specified in Section 9 of ESA/SCC Generic Specification No. 5010. The conditions for operating life testing are specified in Table 5(b) of this specification.

4.8.4 Electrical Circuits for Operating Life Tests

The circuit to be used for performance of the operating life test shall be the same as shown in Figure 5(b) for Power Burn-in.

4.9 TOTAL DOSE IRRADIATION TESTING

Not applicable.

4.10 SPECIAL TESTING

Not applicable.

TABLE 6 - ELECTRICAL MEASUREMENTS AT INTERMEDIATE POINTS AND ON COMPLETION OF ENDURANCE TESTING

No.	CHARACTERISTICS	SYMBOL	SPEC. AND/OR TEST METHOD	TEST CONDITIONS	LIMITS		UNIT
					MIN	MAX	
1	Reverse Current 1	I_{R1}	As per Table 2	As per Table 2	As per Table 2		nA
2	Reverse Current 2	I_{R2}	As per Table 2	As per Table 2	As per Table 2		nA
3	Forward Voltage	V_F	As per Table 2	As per Table 2	As per Table 2		V

FIGURE 6 - BIAS CONDITIONS FOR IRRADIATION TESTING

Not applicable.

TABLE 7 - ELECTRICAL MEASUREMENTS DURING AND ON COMPLETION OF IRRADIATION TESTING

Not applicable.