DIODES, MICROWAVE, SILICON,

TUNING VARACTOR,

BASED ON TYPES ML4351 THRU ML4354

ESCC Detail Specification No. 5512/006

ISSUE 1

October 2002

Document Custodian: European Space Agency - see https://escies.org

LEGAL DISCLAIMER AND COPYRIGHT

european space agency
agence spatiale européenne

Pages 1 to 26

DIODES, MICROWAVE, SILICON,

TUNING VARACTOR,

BASED ON TYPES ML4351 THRU ML4354

ESA/SCC Detail Specification No. 5512/006

SCC

space components
coordination group

Issue/Rev.	Date	Approved by	
		SCCG Chairman	ESA Director General or his Deputy
Issue 1	May 1993		
Revision 'A'	May 2000		

DOCUMENTATION CHANGE NOTICE

Rev. Letter	Rev. Date	Reference	CHANGE Item	Approved DCR No.
'A'	May '00	P1. Cover page		None
		P2. DCN		None
		P4. T of C	: Table 5(a) entry amended	221551
			: Table 5(b) entry amended	221551
			: Figure 5 entry amended to "5(a)"	221551
			: Figure 5(b) entry added	221551
		P15. Para. 4.2.1	: Deviations (a) and (b) paragraph reference amended	221551
			: Deviation (c) deleted and (d) renumbered as "(c)"	221551
		Para. 4.2.2	: Deviation deleted and "None" added	221551
		Para. 4.2.3	: Deviation (a) paragraph reference amended	221551
		P18. Para. 4.7.3	: New paragraph added	221551
			: Existing paragraph renumbered as "4.7.4" and amended	221551
		P22. Table 5(a)	: Title amended	221551
		Table 5(b)	: Title amended	221551
			: Existing Table deleted and new Table added	221551
		Figure 5	: Renumbered as "5(a)"	221551
		Figure 5(b)	: New Figure added	221551
		P23. Para. 4.8.3	: In the second sentence, "5(b)" amended to "5(a)"	221551
		Para. 4.8.4	: In the text, "5" amended to "5(a)"	221551

TABLE OF CONTENTS

TABLES

FIGURES

APPENDICES (Applicable to specific Manufacturers only)

1. GENERAL

1.1 SCOPE

This specification details the ratings, physical and electrical characteristics, test and inspection data for a Diode, Microwave, Silicon, Tuning Varactor, based on Types ML4351 thru ML4354. It shall be read in conjunction with ESA/SCC Generic Specification No. 5010, the requirements of which are supplemented herein.

1.2 TYPE VARIANTS

Variants of the basic diodes specified herein, which are also covered by this specification are given in Table 1(a).

1.3 MAXIMUM RATINGS

The maximum ratings, which shall not be exceeded at any time during use or storage, applicable to the diodes specified herein, are as scheduled in Table 1(b).

1.4 PARAMETER DERATING INFORMATION

The derating information applicable to the diodes specified herein is shown in Figure 1.

1.5 PHYSICAL DIMENSIONS

The physical dimensions of the diodes specified herein are shown in Figure 2.

1.6 FUNCTIONAL DIAGRAM

The functional diagram, showing lead identification, of the diodes specified herein, is shown in Figure 3.

1.7 HANDLING PRECAUTIONS

These devices are susceptible to damage by electrostatic discharge. Therefore, suitable precautions shall be employed for protection during all phases of manufacture, testing, packaging, shipment and any handling.

These components are Categorised as Class 2 with a Minimum Critical Path Failure Voltage of 3400V.

2. APPLICABLE DOCUMENTS

The following documents form part of this specification and shall be read in conjunction with it:-

(a) ESA/SCC Generic Specification No. 5010 for Discrete Microwave Semiconductor Components.

(b) MIL-STD-750, Test Methods and Procedures for Semiconductor Devices.

3. TERMS, DEFINITIONS, ABBREVIATIONS, SYMBOLS AND UNITS

For the purpose of this specification, the terms, definitions, abbreviations, symbols and units specified in ESA/SCC Basic Specification No. 21300 shall apply.

TABLE 1(a) - TYPE VARIANTS

(1) VARIANT	(2) BASED ON TYPE	(3) FIGURE	(4) TOTAL CAPACITANCE C_T (pF)		(5) QUALITY FACTOR (Q) (MINIMUM)	(6) BODY-LID AND LEAD MATERIAL AND FINISH
			MIN	MAX		
01	ML4351 - 30	2(a)	0.56	0.84	1150	A7-D2
02	ML4351 - 31	2(b)	0.56	0.84	1150	A7-D2
03	ML4351 - 33	2(c)	0.61	0.89	1150	A7
04	ML4351 - 36	2(d)	0.56	0.84	1150	A7-D2
05	ML4351 - 96	2(e)	0.53	0.81	1150	A7-D2
06	ML4351 - 97	2(f)	0.53	0.81	1150	A7-D2
07	ML4351 - 103	2(g)	0.66	0.94	1150	A7-D2
08	ML4351 - 118	2(h)	0.60	0.88	1150	A7
09	ML4351 - 120	2(i)	0.51	0.79	1150	D2
10	ML4351 - 186	2(j)	0.51	0.79	1150	D2
11	ML4351 - 276	2(k)	0.51	0.79	1150	D2
12	ML4352 - 30	2(a)	0.74	1.06	1100	A7-D2
13	ML4352 - 31	2(b)	0.74	1.06	1100	A7-D2
14	ML4352 - 33	2(c)	0.79	1.11	1100	A7
15	ML4352 - 36	2(d)	0.74	1.06	1100	A7-D2
16	ML4352 - 96	2(e)	0.71	1.03	1100	A7-D2
17	ML4352 - 97	2(f)	0.71	1.03	1100	A7-D2
18	ML4352 - 103	2(g)	0.84	1.16	1100	A7-D2
19	ML4352 - 118	2(h)	0.78	1.10	1100	A7
20	ML4352 - 120	2(i)	0.69	1.01	1100	D2
21	ML4352 - 186	2(j)	0.69	1.01	1100	D2
22	ML4352 - 276	2(k)	0.69	1.01	1100	D2
23	ML4353 - 30	2(a)	1.00	1.40	1000	A7-D2
24	ML4353 - 31	2(b)	1.00	1.40	1000	A7-D2
25	ML4353 - 33	2(c)	1.05	1.45	1000	A7
26	ML4353 - 36	2(d)	1.00	1.40	1000	A7-D2
27	ML4353 - 96	2(e)	0.97	1.37	1000	A7-D2
28	ML4353 - 97	2(f)	0.97	1.37	1000	A7-D2
29	ML4353 - 103	2(g)	1.10	1.50	1000	A7-D2
30	ML4353 - 118	2(h)	1.04	1.44	1000	A7
31	ML4353 - 120	2(i)	0.95	1.35	1000	D2
32	ML4353 - 186	2(j)	0.95	1.35	1000	D2
33	ML4353 - 276	2(k)	0.95	1.35	1000	D2
34	ML4354 - 30	2(a)	1.55	2.05	900	A7-D2
35	ML4354 - 31	2(b)	1.55	2.05	900	A7-D2
36	ML4354 - 33	2(c)	1.60	2.10	900	A7

TABLE 1(a) - TYPE VARIANTS (CONT'D)

(1) VARIANT	(2) BASED ON TYPE	(3) FIGURE	(4) TOTAL CAPACITANCE C_T (pF)		(5) QUALITY FACTOR (Q) (MINIMUM)	(6) BODY-LID AND LEAD MATERIAL AND FINISH
			MIN	MAX		
37	ML4354 - 36	2(d)	1.55	2.05	900	A7-D2
38	ML4354 - 96	2(e)	1.53	2.02	900	A7-D2
39	ML4354 - 97	2(f)	1.52	2.02	900	A7-D2
40	ML4354 - 103	2(g)	1.65	2.15	900	A7-D2
41	ML4354 - 118	2(h)	1.59	2.09	900	A7
42	ML4354 - 120	2(i)	1.50	2.00	900	D2
43	ML4354 - 186	2(j)	1.50	2.00	900	D2
44	ML4354 - 276	2(k)	1.50	2.00	900	D2

TABLE 1(b) - MAXIMUM RATINGS

No.	CHARACTERISTIC	SYMBOL	MAXIMUM RATINGS	UNIT	REMARKS
1	D.C. Reverse Voltage	V_R	−60	V	Note 1
2	Operating Temperature Range	T_{op}	−65 to +150	°C	T_{amb}
3	Storage Temperature Range	T_{stg}	−65 to +150	°C	
4	Soldering Temperature	T_{sol}	+230	°C	Note 2

NOTES

1. Measured at $I_R = 10\mu A$ and T_{amb} = +25°C. For derating at T_{amb} > +25°C, see Figure 1.
2. Duration 5 seconds maximum (at a distance of not less than 1.5mm from the body for Variants 10, 11, 21, 22, 32, 33, 43 and 44) and the same termination shall not be resoldered until 3 minutes have elapsed.

FIGURE 1 - PARAMETER DERATING INFORMATION

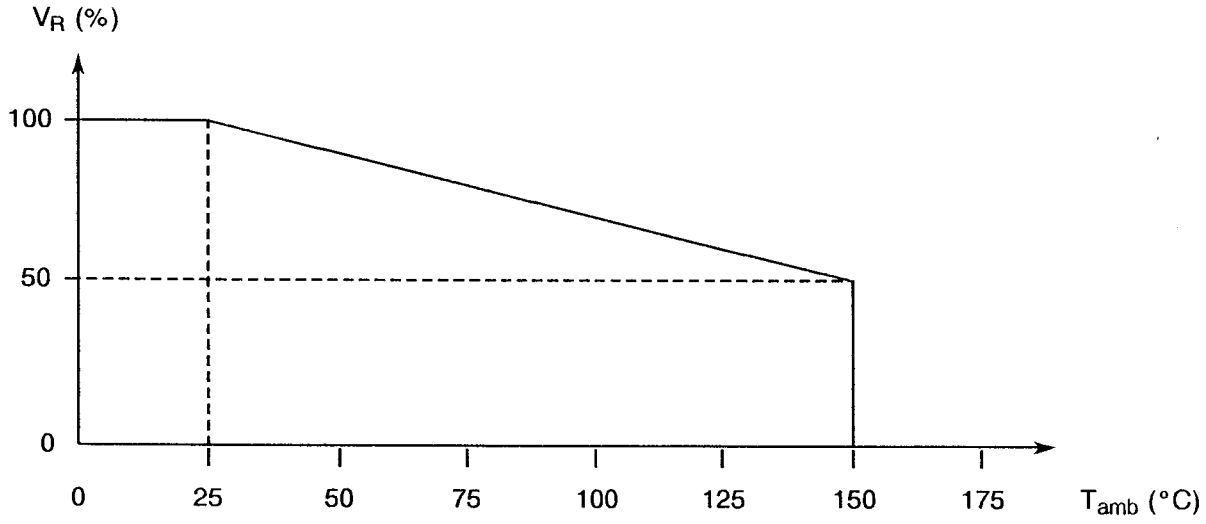

V_R versus Temperature

FIGURE 2 - PHYSICAL DIMENSIONS

FIGURE 2(a) - VARIANTS 01, 12, 23, 34

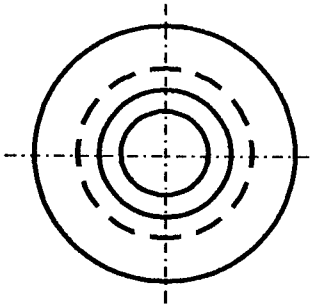

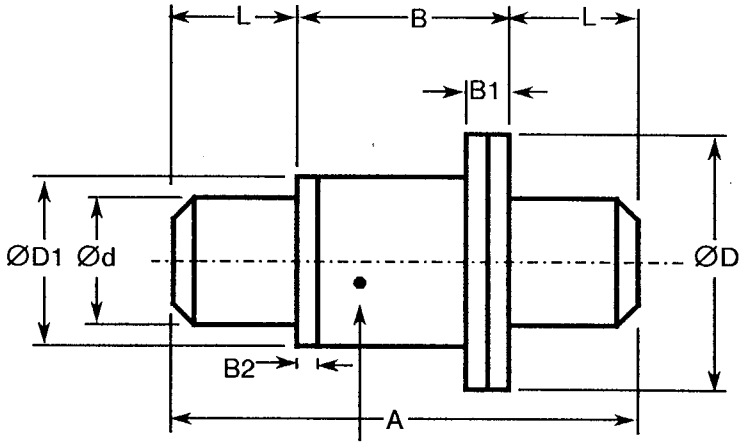

SYMBOL	MILLIMETRES	
	MIN	MAX
A	5.20	5.72
B	2.16	2.46
B1	0.41	0.61
B2	0.15	0.25
Ød	1.52	1.63
ØD	3.00	3.23
ØD1	1.95	2.11
L	1.52	1.63

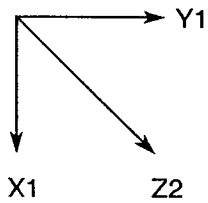

FIGURE 2(b) - VARIANTS 02, 13, 24, 35

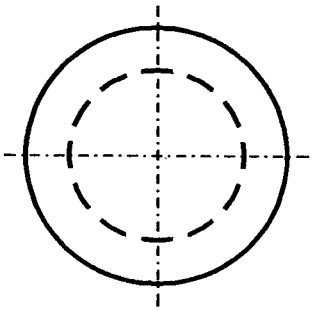

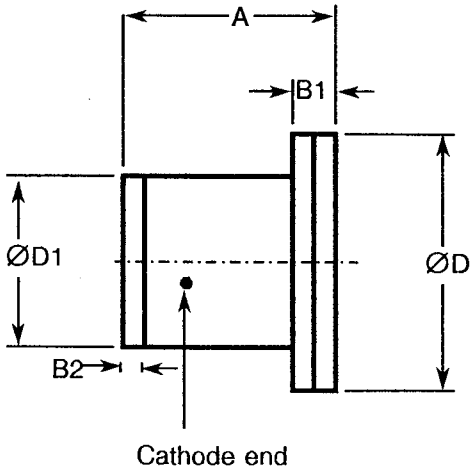

SYMBOL	MILLIMETRES	
	MIN	MAX
A	2.16	2.46
B1	0.41	0.61
B2	0.15	0.25
ØD	3.00	3.23
ØD1	1.95	2.11

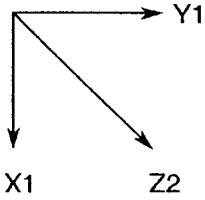

FIGURE 2 - PHYSICAL DIMENSIONS (CONTINUED)

FIGURE 2(c) - VARIANTS 03, 14, 25, 36

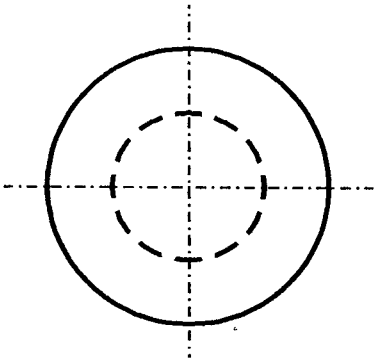

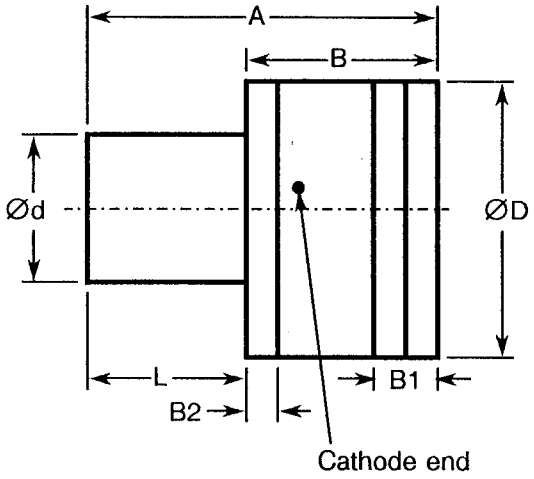

SYMBOL	MILLIMETRES	
	MIN	MAX
A	1.41	1.85
B	0.69	1.02
B1	0.30	0.50
B2	0.05	0.13
Ød	0.61	0.66
ØD	1.22	1.32
L	0.74	0.79

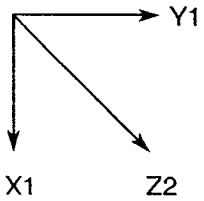

FIGURE 2(d) - VARIANTS 04, 15, 26, 37

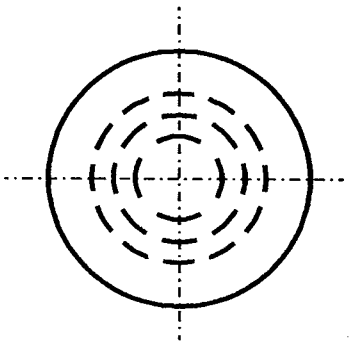

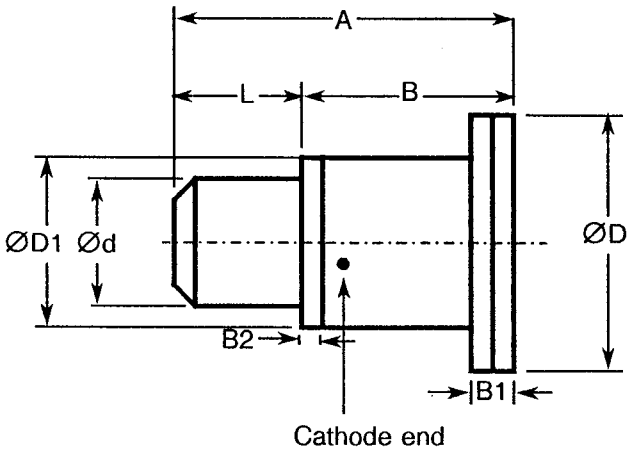

SYMBOL	MILLIMETRES	
	MIN	MAX
A	3.60	4.18
B	2.16	2.46
B1	0.41	0.61
B2	0.15	0.25
Ød	1.52	1.63
ØD	3.00	3.23
ØD1	1.95	2.11
L	1.52	1.63

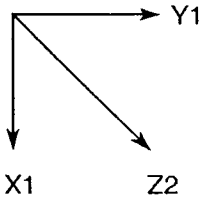

FIGURE 2 - PHYSICAL DIMENSIONS (CONTINUED)

FIGURE 2(e) - VARIANTS 05, 16, 27, 38

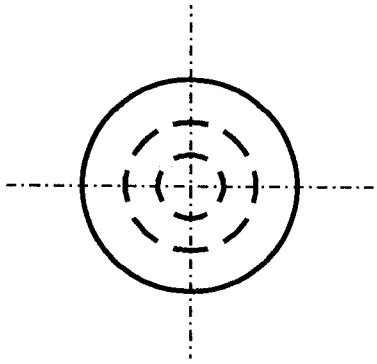

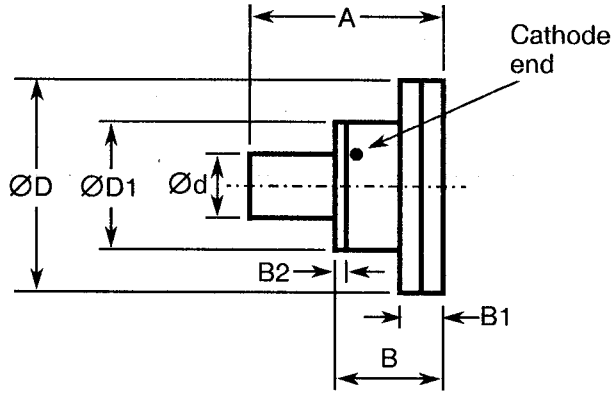

SYMBOL	MILLIMETRES	
	MIN	MAX
A	1.78	2.03
B	1.02	1.27
B1	-	0.38
B2	0.10	0.25
Ød	0.61	0.66
ØD	1.98	2.18
ØD1	1.19	1.35

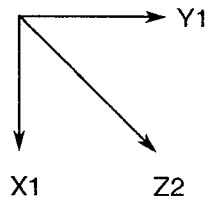

FIGURE 2(f) - VARIANTS 06, 17, 28, 39

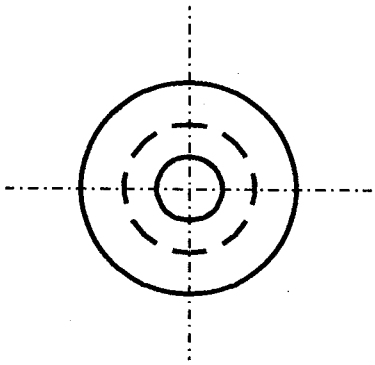

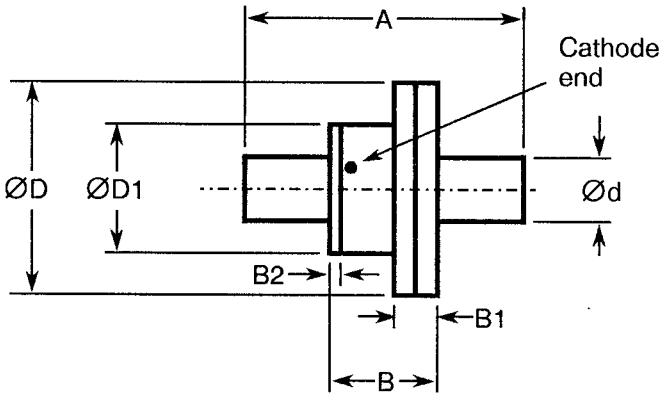

SYMBOL	MILLIMETRES	
	MIN	MAX
A	2.54	2.79
B	1.02	1.27
B1	-	0.38
B2	0.10	0.25
Ød	0.61	0.66
ØD	1.98	2.18
ØD1	1.19	1.35

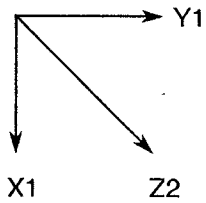

FIGURE 2 - PHYSICAL DIMENSIONS (CONTINUED)

FIGURE 2(g) - VARIANTS 07, 18, 29, 40

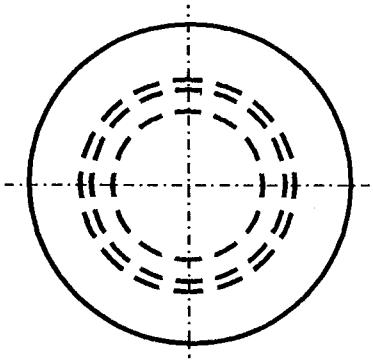

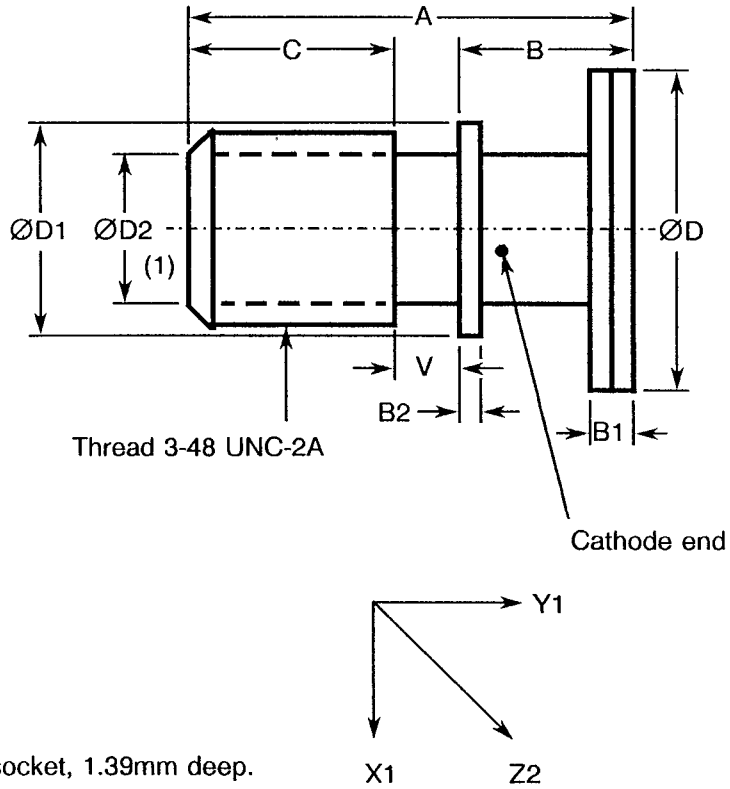

SYMBOL	MILLIMETRES	
	MIN	MAX
A	4.71	5.30
B	1.47	1.80
B1	0.41	0.61
B2	0.20	0.30
C	1.97	3.19
ØD	3.00	3.23
ØD1	2.49	2.59
ØD2	1.60	2.00
V	0.64	0.94

NOTES

1. 6 spline socket, 1.39mm deep.

FIGURE 2(h) - VARIANTS 08, 19, 30, 41

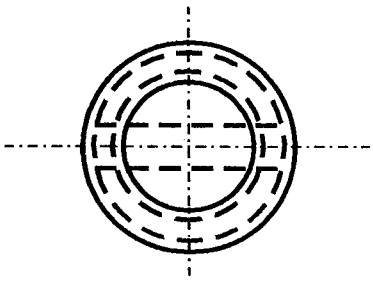

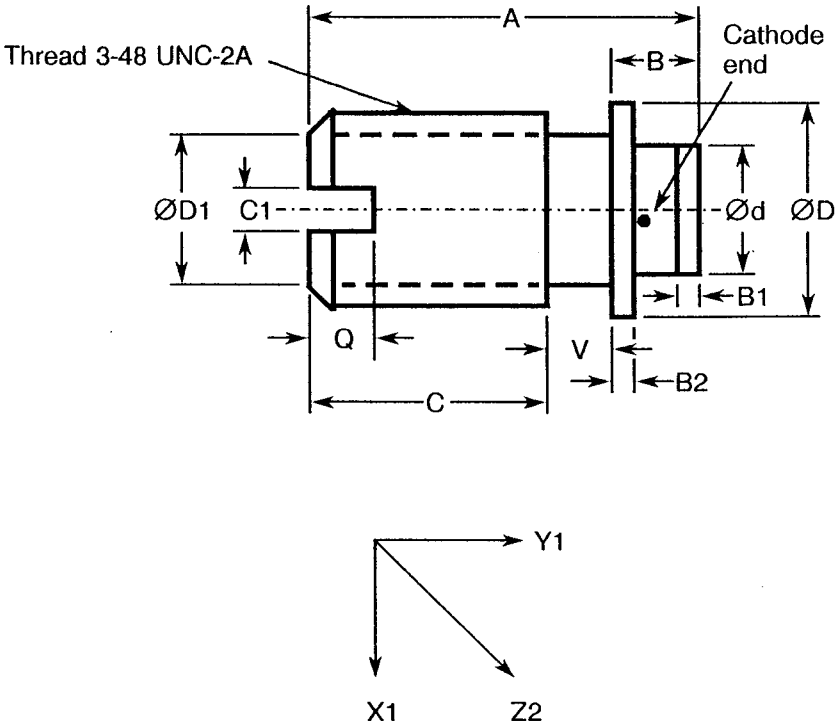

SYMBOL	MILLIMETRES	
	MIN	MAX
A	4.19	4.70
B	0.77	1.04
B1	0.20	0.30
B2	0.22	0.28
C	2.21	3.29
C1	0.38	0.64
Ød	1.22	1.32
ØD	2.49	2.59
ØD1	1.60	2.00
Q	0.64	1.14
V	0.64	0.94

FIGURE 2 - PHYSICAL DIMENSIONS (CONTINUED)

FIGURE 2(i) - VARIANTS 09, 20, 31, 42

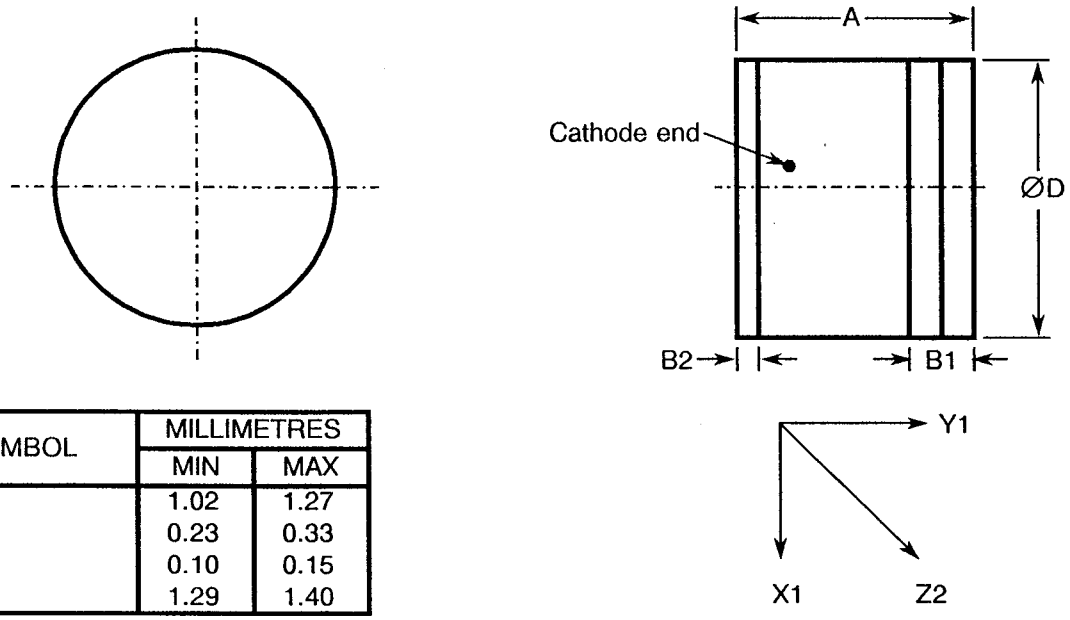

SYMBOL	MILLIMETRES	
	MIN	MAX
A	1.02	1.27
B1	0.23	0.33
B2	0.10	0.15
ØD	1.29	1.40

FIGURE 2(j) - VARIANTS 10, 21, 32, 43

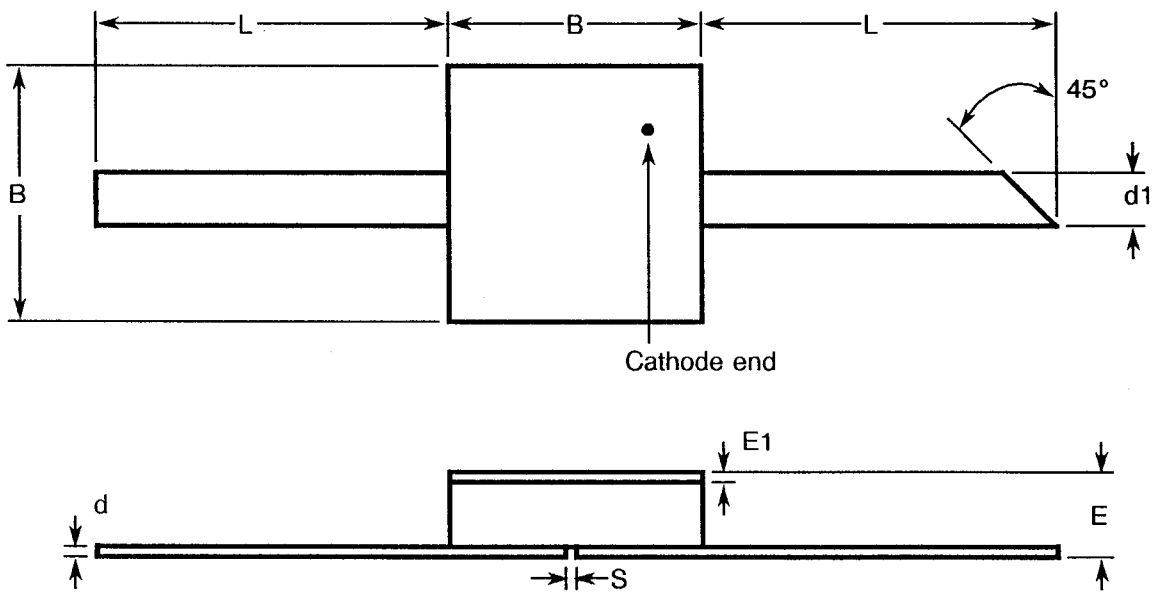

SYMBOL	MILLIMETRES	
	MIN	MAX
B	2.39	2.62
d	0.07	0.15
d1	0.48	0.56
E	0.79	1.12
E1	0.10	0.18
L	3.30	5.84
S	0.10	-

FIGURE 2 - PHYSICAL DIMENSIONS (CONTINUED)

FIGURE 2(k) - VARIANTS 11, 22, 33, 44

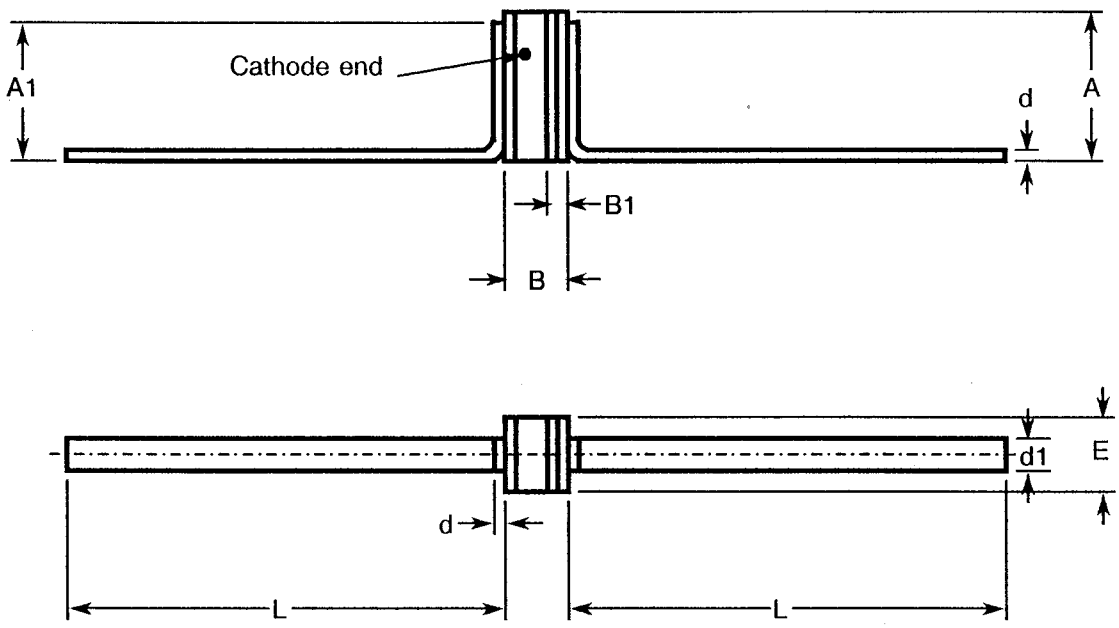

SYMBOL	MILLIMETRES	
	MIN	MAX
A	1.35	2.54
A1	-	2.46
B	1.02	1.27
B1	-	0.38
d	0.07	0.15
d1	0.38	0.64
E	1.29	1.40
L	6.10	12.40

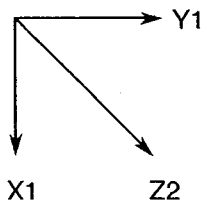

FIGURE 3 - FUNCTIONAL DIAGRAM

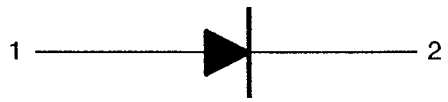

1. Anode
2. Cathode

NOTES

1. The cathode end shall be marked with a black dot or band. The marking will not be on the cathode connection but adjacent to it.

4. REQUIREMENTS

4.1 GENERAL

The complete requirements for procurement of the diodes specified herein shall be as stated in this specification and ESA/SCC Generic Specification No. 5010 for Discrete Microwave Semiconductor Components. Deviations from the Generic Specification applicable to this specification only, are listed in Para. 4.2.

Deviations from the applicable Generic Specification and this Detail Specification, formally agreed with specific Manufacturers on the basis that the alternative requirements are equivalent to the ESA/SCC requirements and do not affect the components' reliability, are listed in the appendices attached to this specification.

4.2 DEVIATIONS FROM GENERIC SPECIFICATION

4.2.1 Deviations from Special In-process Controls

(a) Para. 5.2.3, Total Dose Irradiation Testing: Shall be performed during qualification and extension of qualification.

(b) Para. 5.2.3, Total Dose Irradiation Testing: Shall be performed during procurement on a lot acceptance basis at the total dose irradiation level specified in the purchase order.

(c) Quality Factor Measurement (Q): 3 randomly chosen samples shall be encapsulated in the type of package shown in Figure 2(a) of this specification. After encapsulation, Quality Factor measurements shall be performed using the method shown in Figure 4 of this specification with $V_R = -4.0V$. The limits specified in Table 1(a) of this specification shall be met.

4.2.2 Deviations from Final Production Tests (Chart II)

None.

4.2.3 Deviations from Burn-in and Electrical Measurements (Chart III)

(a) Para. 9.21, High Temperature Reverse Bias Burn-in: Shall be performed at 50% of rated V_R.

4.2.4 Deviations from Qualification Tests (Chart IV)

(a) Para. 9.23, Special Testing: Shall not be performed.

4.2.5 Deviations from Lot Acceptance Tests (Chart V)

(a) Para. 9.23, Special Testing: Shall not be performed.

4.3 MECHANICAL AND ENVIRONMENTAL REQUIREMENTS

4.3.1 Dimension Check

The dimensions of the diodes specified herein shall be checked. They shall conform to those shown in Figure 2.

4.3.2 Weight

The maximum weight of the diodes specified herein shall be:

Variant No.	Weight (g)
01, 12, 23, 34	0.12
02, 13, 24, 35	0.06
03, 14, 25, 36	0.01
04, 15, 26, 37	0.10
05, 16, 27, 38	0.015

Variant No.	Weight (g)
06, 17, 28, 39	0.022
07, 08, 18, 19, 29, 30, 40, 41	0.14
09, 20, 31, 42	0.014
10, 21, 32, 43	0.06
11, 22, 33, 44	0.025

4.3.3 Terminal Strength

The requirements for terminal strength testing are specified in Section 9 of ESA/SCC Generic Specification No. 5010. The test conditions shall be as follows:-

(a) **Condition: 'A' (Tension)**

Variants 10, 21, 32 and 43:

- Force: 5.1N.
- Duration: 5 seconds.

Variants 11, 22, 33 and 44:

- Force: 1.22N.
- Duration: 5 seconds.

(b) **Condition: 'D2' (Stud Torque)**

Variants 07, 18, 29 and 40:

- Torque: 56mNm.
- Duration: 5 seconds.

Variants 08, 19, 30 and 41:

- Torque: 42mNm.
- Duration: 5 seconds.

(c) **Condition: Compression**

Variants 01, 02, 04, 07, 12, 13, 15, 18, 23, 24, 26, 29, 34, 35, 37 and 40:

- Force: 50N.
- Duration: 5 seconds.

Variants 03, 05, 06, 08, 09, 14, 16, 17, 19, 20, 25, 27, 28, 30, 31, 36, 38, 39, 41 and 42:

- Force: 10N.
- Duration: 5 seconds.

The compression test shall be performed by applying the specified force to the end-cap by means of a suitable weight applied for the specified time. On completion of the test, a visual examination shall be performed to check for damage to the end-cap or the ceramic body.

4.4 MATERIALS AND FINISHES

The materials and finishes shall be as specified herein. Where a definite material is not specified, a material which will enable the diodes specified herein to meet the performance requirements of this specification shall be used. Acceptance or approval of any constituent material shall not guarantee acceptance of the finished product.

4.4.1 Case

The case shall be hermetically sealed and have a ceramic body. The lid shall be brazed, welded or preform soldered.

4.4.2 Lead Materials and Finish

(a) For Variants 01, 02, 04, 05, 06, 07, 12, 13, 15, 16, 17, 18, 23, 24, 26, 27, 28, 29, 34, 35, 37, 38, 39 and 40, the body material shall be Type 'A' with Type '7' finish and the lid material shall be Type 'D' with Type '2' finish, in accordance with the requirements of ESA/SCC Basic Specification No. 23500.

(b) For Variants 03, 08, 14, 19, 25, 30, 36 and 41, the lead material shall be Type 'A' with Type '7' finish in accordance with the requirements of ESA/SCC Basic Specification No. 23500.

(c) For Variants 09, 10, 11, 20, 21, 22, 31, 32, 33, 42, 43 and 44, the lead material shall be Type 'D' with Type '2' finish in accordance with the requirements of ESA/SCC Basic Specification No. 23500.

4.5 MARKING

4.5.1 General

The marking of components delivered to this specification shall be in accordance with the requirements of ESA/SCC Basic Specification No. 21700 and the following paragraphs. When the component is too small to accommodate all of the marking specified, as much as space permits shall be marked and the marking information, in full, shall accompany the component in its primary package.

The information to be marked and the order of precedence, shall be as follows:-

(a) Cathode Identification.

(b) The SCC Component Number.

(c) Traceability Information.

4.5.2 Cathode Identification

Cathode identification shall be as shown in Figures 2 and 3 of this specification.

4.5.3 The SCC Component Number

Each component shall bear the SCC Component Number which shall be constituted and marked as follows:

551200601BF

Detail Specification Number
Type Variant (see Table 1(a))
Testing Level (B or C, as applicable)
Total Dose Irradiation Level (if applicable)

The Total Dose Irradiation Level designation shall be added for those devices for which a sample has been successfully tested to the level in question. For these devices, a code letter shall be added in accordance with the requirements of ESA/SCC Basic Specification No. 22900.

4.5.4 Traceability Information

Each component shall be marked in respect of traceability information as defined in ESA/SCC Basic Specification No. 21700.

4.6 ELECTRICAL MEASUREMENTS

4.6.1 Electrical Measurements at Room Temperature

The parameters to be measured at room temperature are scheduled in Table 2. Unless otherwise specified, the measurements shall be performed at $T_{amb} = +22 \pm 3$ °C.

4.6.2 Electrical Measurements at High and Low Temperatures

The parameters to be measured at high and low temperatures are scheduled in Table 3. Unless otherwise specified, the measurements shall be performed at $T_{amb} = +150(+0-3)$ °C.

4.6.3 Circuits for Electrical Measurements

A circuit for use in performing the quality factor measurement is shown in Figure 4.

4.7 BURN-IN TESTS

Burn-in shall be Category 1 of Chart III(a).

4.7.1 Parameter Drift Values

The parameter drift values applicable to burn-in are specified in Table 4 of this specification. Unless otherwise stated, the measurements shall be performed at $T_{amb} = +22 \pm 3$ °C. The parameter drift values (Δ) applicable to the scheduled parameters shall not be exceeded. In addition to these drift value requirements for a given parameter, the appropriate limit value specified in Table 2 shall not be exceeded.

4.7.2 Conditions for High Temperature Reverse Bias Burn-in

The requirements for the high temperature reverse bias burn-in are specified in Section 7 of ESA/SCC Generic Specification No. 5010. The conditions for high temperature reverse bias burn-in shall be as specified in Table 5(a) of this specification.

4.7.3 Conditions for Power Burn-in

The requirements for power burn-in are specified in Section 7 of ESA/SCC Generic Specification No. 5010. The conditions for power burn-in shall be as specified in Table 5(b) of this specification.

4.7.4 Electrical Circuits for High Temperature Reverse Bias and Power Burn-in

Circuits for use in performing the H.T.R.B and power burn-in tests are shown in Figures 5(a) and 5(b) of this specification.

TABLE 2 - ELECTRICAL MEASUREMENTS AT ROOM TEMPERATURE - D.C. PARAMETERS

No.	CHARACTERISTICS	SYMBOL	MIL-STD-750 TEST METHOD	TEST CONDITIONS	LIMITS		UNIT
					MIN.	MAX.	
1	Reverse Current 1	I_{R1}	4016	$V_R = -60V$	-	10	µA
2	Reverse Current 2	I_{R2}	4016	$V_R = -30V$	-	50	nA
3	Forward Voltage	V_F	4011	$I_F = 100mA$	-	1.0	V

TABLE 2 - ELECTRICAL MEASUREMENTS AT ROOM TEMPERATURE - A.C. PARAMETERS

No.	CHARACTERISTICS	SYMBOL	MIL-STD-750 TEST METHOD	TEST CONDITIONS	LIMITS		UNIT
					MIN.	MAX.	
4	Total Capacitance	C_T	4001	$V_R = -4.0V$ $f = 1.0MHz$	Note 1		pF
5	Total Capacitance Ratio	-	4001	$V_R = 0V$ $V_R = -60V$ $f = 1.0MHz$ Note 2 Variants 01 to 11 Variants 12 to 22 Variants 23 to 33 Variants 34 to 44	 3.5 4.2 4.5 5.5	 - - - -	

NOTES

1. See Column 4 of Table 1(a).
2. Ratio = $\frac{C_T \text{ at } V_R = 0V}{C_T \text{ at } V_R = -60V}$

TABLE 3 - ELECTRICAL MEASUREMENTS AT HIGH AND LOW TEMPERATURES

No.	CHARACTERISTICS	SYMBOL	SPEC.AND/OR TEST METHOD	TEST CONDITIONS	LIMITS		UNIT
					MIN.	MAX.	
2	Reverse Current 2	I_{R2}	As per Table 2	As per Table 2	-	10	µA

TABLE 4 - PARAMETER DRIFT VALUES

No.	CHARACTERISTICS	SYMBOL	SPEC.AND/OR TEST METHOD	TEST CONDITIONS	CHANGE LIMITS (Δ)	UNIT
2	Reverse Current 2	I_{R2}	As per Table 2	As per Table 2	± 10 (1) or (2) ± 100 (1)	nA %
3	Forward Voltage	V_F	As per Table 2	As per Table 2	± 100 (1)	mV

NOTES

1. Δ1 = Δ2.
2. Whichever is the greater, referred to the initial measurement.

FIGURE 4 - CIRCUITS FOR ELECTRICAL MEASUREMENTS

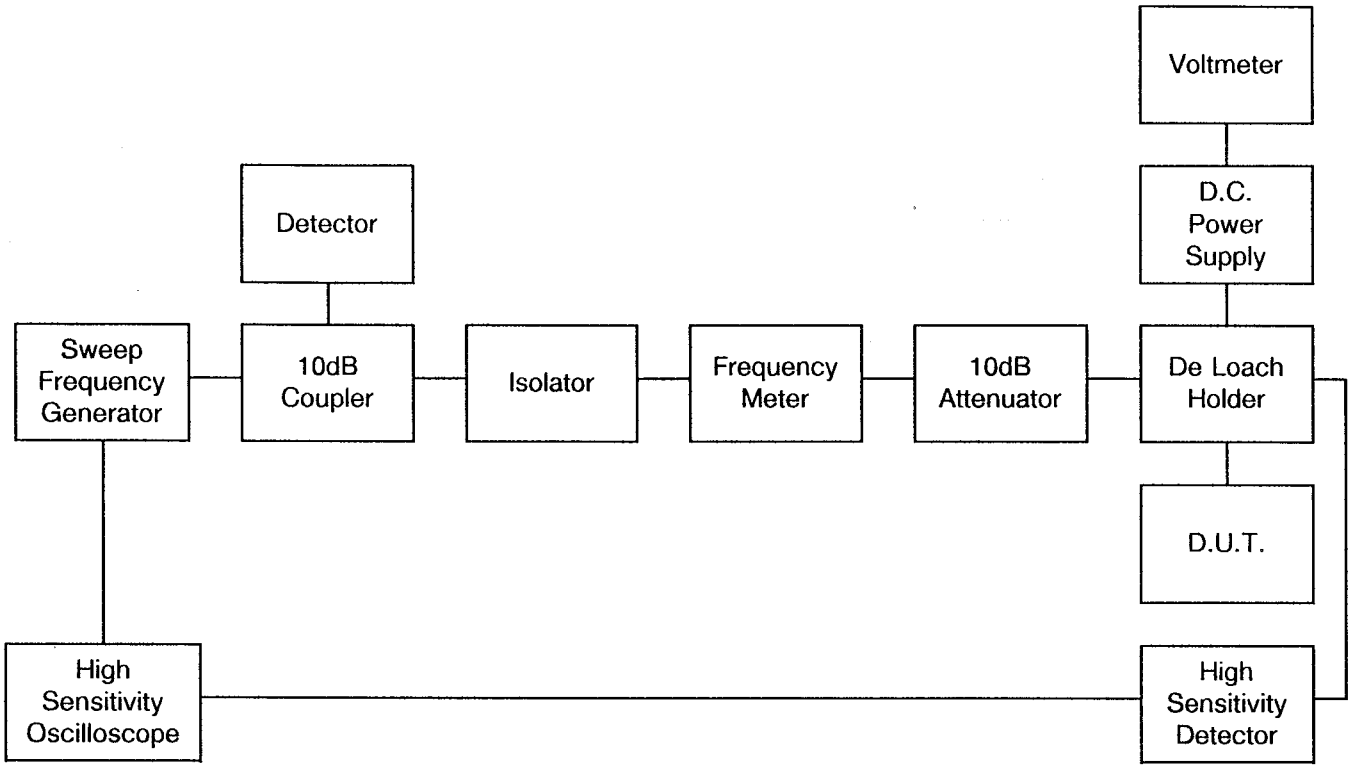

TABLE 5(a) - CONDITIONS FOR HIGH TEMPERATURE REVERSE BIAS BURN-IN AND OPERATING LIFE TESTS

No.	CHARACTERISTICS	SYMBOL	CONDITIONS	UNIT
1	Ambient Temperature	T_{amb}	+150(+0−3)	°C
2	Reverse Voltage	V_R	−30	V

TABLE 5(b) - CONDITIONS FOR POWER BURN-IN

No.	CHARACTERISTICS	SYMBOL	CONDITIONS	UNIT
1	Ambient Temperature	T_{amb}	+125(+0−3)	°C
2	Forward Current	I_F	25	mA

FIGURE 5(a) - ELECTRICAL CIRCUIT FOR HIGH TEMPERATURE REVERSE BIAS BURN-IN AND OPERATING LIFE TESTS

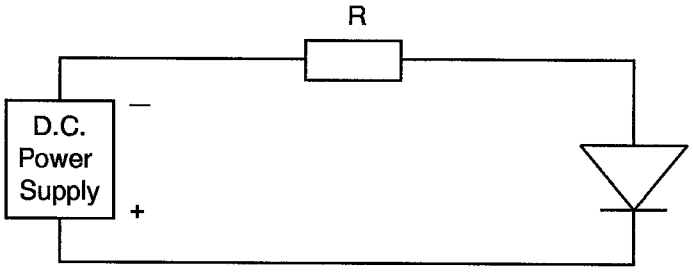

FIGURE 5(b) - ELECTRICAL CIRCUIT FOR POWER BURN-IN

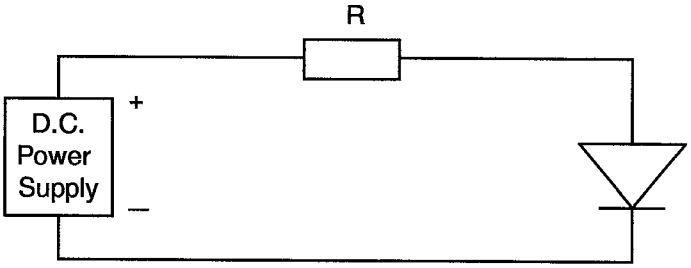

4.8 ENVIRONMENTAL AND ENDURANCE TESTS (CHARTS IV AND V OF ESA/SCC GENERIC SPECIFICATION NO. 5010)

4.8.1 Electrical Measurements on Completion of Environmental Tests

The parameters to be measured on completion of environmental tests are scheduled in Table 2. Unless otherwise stated, the measurements shall be performed at $T_{amb} = +22 \pm 3$ °C.

4.8.2 Electrical Measurements at Intermediate Points and on Completion of Endurance Tests

The parameters to be measured at intermediate points and on completion of endurance tests are scheduled in Table 6. Unless otherwise stated, the measurements shall be performed at $T_{amb} = +22 \pm 3$ °C.

4.8.3 Conditions for Operating Life Tests (Part of Endurance Testing)

The requirements for operating life testing are specified in Section 9 of ESA/SCC Generic Specification No. 5010. The conditions for operating life testing are specified in Table 5(a) of this specification.

4.8.4 Electrical Circuits for Operating Life Tests

The circuit to be used for performance of the operating life test shall be the same as shown in Figure 5(a) for High Temperature Reverse Bias Burn-in.

4.9 TOTAL DOSE IRRADIATION TESTING

4.9.1 Application

If specified in Para. 4.2.1 of this specification, total dose irradiation testing shall be performed in accordance with the requirements of ESA/SCC Basic Specification No. 22900.

4.9.2 Bias Conditions

Continuous bias shall be applied during irradiation testing as shown in Figure 6 of this specification.

4.9.3 Electrical Measurements

The parameters to be measured prior to irradiation exposure are scheduled in Table 2 of this specification. Only devices which meet the requirements of Table 2 shall be included in the test sample.

The parameters to be measured during and on completion of irradiation testing are scheduled in Table 7 of this specification.

4.10 SPECIAL TESTING

Not applicable.

TABLE 6 - ELECTRICAL MEASUREMENTS AT INTERMEDIATE POINTS AND ON COMPLETION OF ENDURANCE TESTING

No.	CHARACTERISTICS	SYMBOL	SPEC. AND/OR TEST METHOD	TEST CONDITIONS	LIMITS		UNIT
					MIN.	MAX.	
1	Reverse Current 1	I_{R1}	As per Table 2	As per Table 2	As per Table 2		µA
2	Reverse Current 2	I_{R2}	As per Table 2	As per Table 2	As per Table 2		nA
3	Forward Voltage	V_F	As per Table 2	As per Table 2	As per Table 2		V
4	Total Capacitance	C_T	As per Table 2	As per Table 2	As per Table 2		pF

FIGURE 6 - BIAS CONDITIONS FOR IRRADIATION TESTING

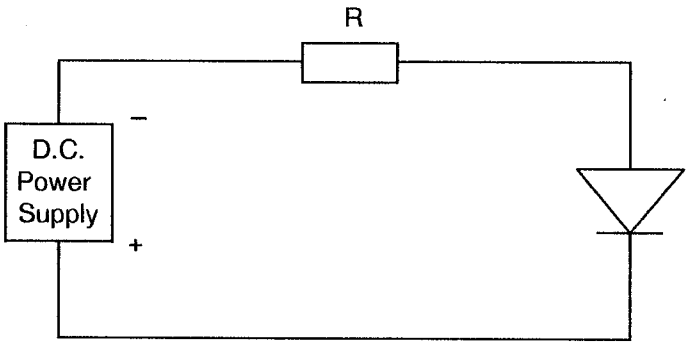

NOTES

1. A reverse bias of $V_R = -30V$, shall be applied.

TABLE 7 - ELECTRICAL MEASUREMENTS DURING AND ON COMPLETION OF IRRADIATION TESTING

No.	CHARACTERISTICS	SYMBOL	SPEC. AND/OR TEST METHOD	TEST CONDITIONS	CHANGE LIMITS (Δ)	UNIT
2	Reverse Current 2	I_{R2}	As per Table 2	As per Table 2	Note 1	nA

NOTES

1. The graph given below shall be used to determine the maximum permitted change.

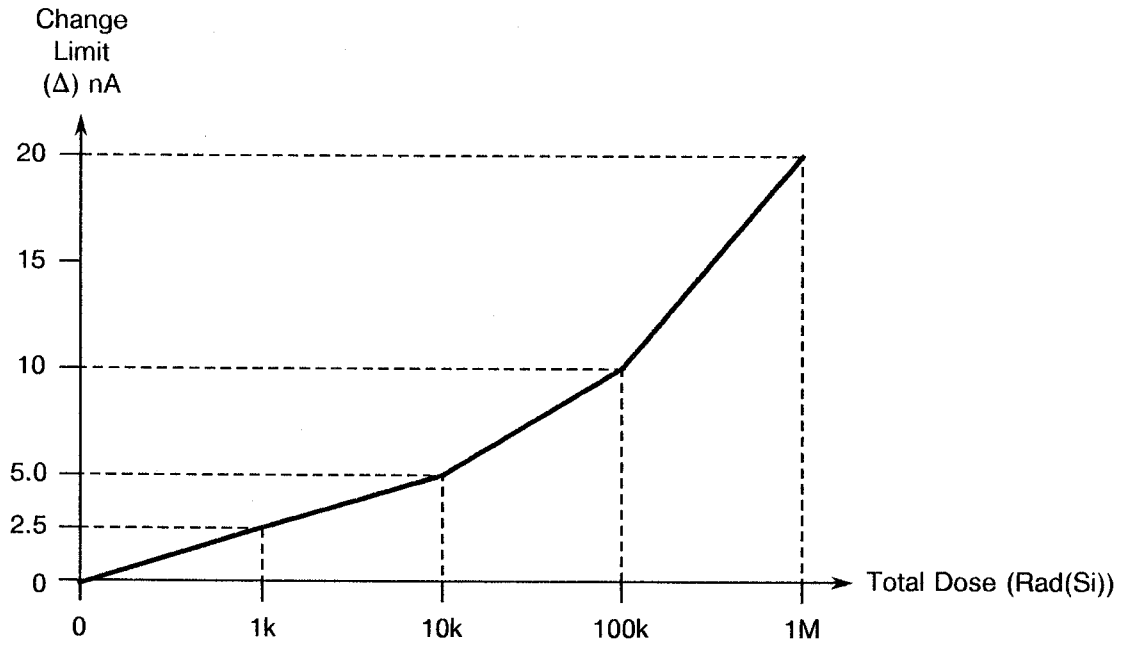

APPENDIX 'A'

AGREED DEVIATIONS FOR M/A-Com LTD. (G.B.)

ITEMS AFFECTED	DESCRIPTION OF DEVIATIONS
Para. 4.2.2	Para. 9.4, "High Temperature Stabilisation Bake": May be performed at +150(+0−3) °C.