DOCUMENT CHANGE REQUEST

DCR number 140	Changes required for: General	Originator: S Thacker
Date: 2004/09/10	Date sent: 2004/09/10	Organisation: ESA/ESTEC
Status: IMPLEMENTED		

Title:	HCMOS 8-Bit Shift Registers with 3 State Output Registers, based on type 54HC595		
Number:	9306/051	Issue:	2

Other documents affected:

Page:

See attached Markup

Paragraph:

See attached Markup

Original wording:

Proposed wording:

1) para 2.3.1, 2.3.2, 2.4, 2.5 Electrical measurements Tables: Correction of IOL & IOH conditions for VOL4, VOL5 & VOH4, VOH5 tests for output QH' by addition of VOL6, VOL7, VOH6, VOH7 - see attached mark-up for details.

2) In addition several editorial corrections have been included as detailed on the mark-up including:
a) - para 1.4.2 Component type variants: delete "G8" terminal material & finish.
b) - para 2.3.1 & 2.3.2 Electrical measurements Tables: Insert VIL & VIH definitions in timing parameter tests.
c) - para 2.3.3 Note 1: expand note to include definition of inputs & outputs not under test.
d) - para 2.3.3 Note 6: add "with 0 failures permitted"
e) - para 2.3.3 Note 7 replace "clock" with actual inputs tested "SRCLK" & "RCLK".
f) - other minor editorial amendments have been included as per the mark-up.

Justification:

1) Correction of a technical error in the specification.

2) Editorial changes have been made for the purposes of clarification and consistency of content of this specification to others in the 54HC and 4000B series of ESCC specifications.

Attachments:
9306051_DCR_PAGES.pdf, 140att1.pdf, null
Modifications:
N/A
Approval signature:
Date signed:
2004-09-10

MARK-UP PER DCR.
S. Thacker.

ESCC
European Space Components Coordination

Pages 1 to 28

INTEGRATED CIRCUITS, SILICON MONOLITHIC, HCMOS

8-BIT SHIFT REGISTER WITH 3-STATE OUTPUT REGISTER

BASED ON TYPE 54HC595

ESCC Detail Specification No. 9306/051

Issue ~~2~~ 3	~~October 2003~~ September 2004

esa

Document Custodian: European Space Agency - see https://escies.org

LEGAL DISCLAIMER AND COPYRIGHT

European Space Agency, Copyright © ~~2003~~ 2004. All rights reserved.

The European Space Agency disclaims any liability or responsibility, to any person or entity, with respect to any loss or damage caused, or alleged to be caused, directly or indirectly by the use and application of this ESCC publication.

This publication, without the prior permission of the European Space Agency and provided that it is not used for a commercial purpose, may be:

- copied in whole, in any medium, without alteration or modification.
- copied in part, in any medium, provided that the ESCC document identification, comprising the ESCC symbol, document number and document issue, is removed.

DOCUMENTATION CHANGE NOTICE

(Refer to https://escies.org for ESCC DCR content)

DCR No.	CHANGE DESCRIPTION
~~48~~	Specification upissued to incorporate editorial and technical changes per DCR.

per allocated DCR No.

1. GENERAL

1.1 SCOPE

This specification details the ratings, physical and electrical characteristics and test and inspection data for the component type variants and/or the range of components specified below. It supplements the requirements of, and shall be read in conjunction with, the ESCC Generic Specification listed under Applicable Documents.

1.2 APPLICABLE DOCUMENTS

The following documents form part of this specification and shall be read in conjunction with it:

(a) ESCC Generic Specification No. 9000.
(b) MIL-STD-883, Test Methods and Procedures for Microelectronics.

1.3 TERMS, DEFINITIONS, ABBREVIATIONS, SYMBOLS AND UNITS

For the purpose of this specification, the terms, definitions, abbreviations, symbols and units specified in ESCC Basic Specification No. 21300 shall apply.

1.4 THE ESCC COMPONENT NUMBER AND COMPONENT TYPE VARIANTS

1.4.1 The ESCC Component Number

The ESCC Component number shall be constituted as follows:

Example: 930605101F

- Detail Specification Reference: 9306051
- Component Type Variant Number: 01 (as required)
- Total Dose Radiation Level Letter: F (as required)

1.4.2 Component Type Variants

The component type variants applicable to this specification are as follows:

Variant Number	Based on Type	Case	Terminal Material and /or Finish	Weight max g	Total Dose Radiation Level Letter
01	54HC595	FP	G2	0.7	F [50kRAD(Si)]
02	54HC595	FP	G4	0.7	F [50kRAD(Si)]
05	54HC595	CCP	2	0.6	F [50kRAD(Si)]
10	54HC595	DIP	G2	2.2	F [50kRAD(Si)]
11	54HC595	DIP	G4	2.2	F [50kRAD(Si)]
12	54HC595	SO	G2	0.7	F [50kRAD(Si)]
13	54HC595	SO	G4	0.7	F [50kRAD(Si)]

The terminal material and/or finish shall be in accordance with the requirements of ESCC Basic Specification No. 23500.

The total dose radiation level letter shall be as defined in ESCC Basic Specification No. 22900. If an alternative radiation test level is specified in the purchase order the letter shall be changed accordingly.

1.5 MAXIMUM RATINGS

The maximum ratings shall not be exceeded at any time during use or storage.

Maximum ratings shall only be exceeded during testing to the extent specified in this specification and when stipulated in Test Methods and Procedures of the applicable ESCC Generic Specification.

Characteristics	Symbols	Maximum Ratings	Units	Remarks
Supply Voltage	V_{DD}	-0.5 to 7	V	Note 1
Input Voltage	V_{IN}	-0.5 to V_{DD} +0.5	V	Notes 1, 2
Output Voltage	V_{OUT}	-0.5 to V_{DD} +0.5	V	Notes 1, 3
Device Power Dissipation (Continuous)	P_D	420	mW	Note 4
Supply Current	I_{DDop}	70	mA	
Operating Temperature Range	T_{op}	-55 to +125	°C	T_{amb}
Storage Temperature Range	T_{stg}	-65 to +150	°C	
Soldering Temperature For FP, DIP and SO For CCP	T_{sol}	 +265 +245	°C	 Note 5 Note 6

NOTES:

1. Device is functional for $2V \leq V_{DD} \leq 6V$.
2. Input current limited to $I_{IC} = \pm 20mA$.
3. Output current limited to $I_{OUT} = \pm 35mA$.
4. The maximum device dissipation is determined by I_{DDop} max (70mA)x6V.
5. Duration 10 seconds maximum at a distance of not less than 1.5mm from the device body and the same terminal shall not be resoldered until 3 minutes have elapsed.
6. Duration 5 seconds maximum and the same terminal shall not be resoldered until 3 minutes have elapsed.

1.6 HANDLING PRECAUTIONS

These devices are susceptible to damage by electrostatic discharge. Therefore, suitable precautions shall be employed for protection during all phases of manufacture, testing, packaging, shipment and any handling.

These components are categorised as Class 2 per ESCC Basic Specification No. 23800 with a Minimum Critical Path Failure Voltage of 2500 Volts.

1.7 PHYSICAL DIMENSIONS AND TERMINAL IDENTIFICATION

Consolidated Notes are given following the case drawings and dimensions.

2. REQUIREMENTS

2.1 GENERAL

The complete requirements for procurement of the components specified herein are as stated in this specification and the applicable ESCC Generic Specification. Permitted deviations from the applicable Generic Specification, applicable to this specification only, are listed below.

Permitted deviations from the applicable Generic Specification and this Detail Specification, formally agreed with specific Manufacturers on the basis that the alternative requirements are equivalent to the ESCC requirement and do not affect the component's reliability, are listed in the appendices attached to this specification.

2.1.1 Deviations from the Generic Specification

None.

2.2 MARKING

The marking shall be in accordance with the requirements of ESCC Basic Specification No. 21700 and as follows.

The information to be marked on the component shall be:

(a) Terminal identification.
(b) The ESCC qualified components symbol (for ESCC qualified components only).
(c) The ESCC Component Number.
(d) Traceability information.

2.3 ELECTRICAL MEASUREMENTS AT ROOM, HIGH AND LOW TEMPERATURES

Electrical measurements shall be performed at room, high and low temperatures. Consolidated Notes are given after the tables.

2.3.1 Room Temperature Electrical Measurements

The measurements shall be performed at T_{amb}=+22 ± 3°C.

Characteristics	Symbols	MIL-STD-883 Test Method	Test Conditions Note 1	Limits		Units
				Min	Max	
Functional Test 1	-	3014	Verify Truth Table without Load V_{IL}=0.3V,V_{IH}=1.5V V_{DD}=2V,V_{SS}=0V t_r<1µs, Note 2	-	-	-
Functional Test 2	-	3014	Verify Truth Table without Load V_{IL}=0.9V,V_{IH}=3.15V V_{DD}=4.5V,V_{SS}=0V t_r=t_f<500ns Note 2	-	-	-

Characteristics	Symbols	MIL-STD-883 Test Method	Test Conditions Note 1	Limits		Units
				Min	Max	
Functional Test 3	-	3014	Verify Truth Table without Load V_{IL}=1.2V,V_{IH}=4.2V V_{DD}=6V,V_{SS}=0V t_r=t_f<400ns Note 2	-	-	-
Quiescent Current	I_{DD}	3005	V_{IL}=0V,V_{IH}=6V V_{DD}=6V,V_{SS}=0V All Outputs Open Note 3	-	400	nA
Low Level Input Current	I_{IL}	3009	V_{IN} (Under Test)=0V V_{IN} (Remaining Inputs)=6V V_{DD}=6V,V_{SS}=0V	-	-50	nA
High Level Input Current	I_{IH}	3010	V_{IN} (Under Test)=6V V_{IN} (Remaining Inputs)=0V V_{DD}=6V,V_{SS}=0V	-	50	nA
Low Level Output Voltage 1	V_{OL1}	3007	V_{IL}=0.3V, V_{IH}=1.5V, I_{OL}=20µA V_{DD}=2V, V_{SS}=0V	-	100	mV
Low Level Output Voltage 2	V_{OL2}	3007	V_{IL}=0.9V, V_{IH}=3.15V, I_{OL}=20µA V_{DD}=4.5V, V_{SS}=0V	-	100	mV
Low Level Output Voltage 3	V_{OL3}	3007	V_{IL}=1.2V, V_{IH}=4.2V, I_{OL}=20µA V_{DD}=6V, V_{SS}=0V	-	100	mV
Low Level Output Voltage 4,	V_{OL4}	3007	V_{IL}=0.9V, V_{IH}=3.15V, I_{OL}=6mA V_{DD}=4.5V, V_{SS}=0V	-	260	mV
Low Level Output Voltage 5,	V_{OL5}	3007	V_{IL}=1.2V, V_{IH}=4.2V, I_{OL}=7.8mA V_{DD}=6V, V_{SS}=0V	-	260	mV
High Level Output Voltage 1	V_{OH1}	3006	V_{IL}=0.3V, V_{IH}=1.5V, I_{OH}=-20µA V_{DD}=2V, V_{SS}=0V	1.9	-	V
High Level Output Voltage 2	V_{OH2}	3006	V_{IL}=0.9V, V_{IH}=3.15V, I_{OH}=-20µA V_{DD}=4.5V, V_{SS}=0V	4.4	-	V
High Level Output Voltage 3	V_{OH3}	3006	V_{IL}=1.2V, V_{IH}=4.2V, I_{OH}=-20µA V_{DD}=6V, V_{SS}=0V	5.9	-	V
High Level Output Voltage 4,	V_{OH4}	3006	V_{IL}=0.9V, V_{IH}=3.15V, I_{OH}=-6mA V_{DD}=4.5V, V_{SS}=0V	3.98	-	V
Low Level Output Voltage 6, QH'	V_{OL6}	3007	V_{IL}=0.9V, V_{IH}=3.15V I_{OL}=4mA V_{DD}=4.5V, V_{SS}=0V	–	260	mV
Low Level Output Voltage 7, QH'	V_{OL7}	3007	V_{IL}=1.2V, V_{IH}=4.2V I_{OL}=5.2mA V_{DD}=6V, V_{SS}=0V	–	260	mV

QA, QB, QC, QD
QE, QF, QG, QH

$V_{OL6,7}$

High Level Output Voltage 6, QH'	V_{OH6}	3006	$V_{IL}=0.9V$, $V_{IH}=3.15V$ $I_{OH}=-4mA$ $V_{DD}=4.5V$, $V_{SS}=0V$	3.98	—	V
High Level Output Voltage 7, QH'	V_{OH7}	3006	$V_{IL}=1.2V$, $V_{IH}=4.2V$ $I_{OH}=-5.2mA$ $V_{DD}=6V$, $V_{SS}=0V$	5.48	—	V

QA, QB, QC, QD
QE, QF, QG, QH

$V_{OH6,7}$

Characteristics	Symbols	MIL-STD-883 Test Method	Test Conditions Note 1	Limits		Units
				Min	Max	
High Level Output Voltage 5	V_{OH5}	3006	$V_{IL}=1.2V$, $V_{IH}=4.2V$, $I_{OH}=-7.8mA$ $V_{DD}=6V$, $V_{SS}=0V$	5.48	-	V
Threshold Voltage N-Channel	V_{THN}	-	$\overline{G}$ Input at Ground All Other Inputs: $V_{IN}=5V$ $V_{DD}=5V$, $I_{SS}=-10\mu A$	-0.45	-1.45	V
Threshold Voltage P-Channel	V_{THP}	-	$\overline{G}$ Input at Ground All Other Inputs: $V_{IN}=-5V$ $V_{SS}=-5V$, $I_{DD}=10\mu A$	0.45	1.35	V
Input Clamp Voltage ~~(~~to V_{SS}~~)~~ 1,	V_{IC1}	-	I_{IN} (Under Test)= -0.1mA V_{DD}=Open, $V_{SS}=0V$ All Other Pins Open	-400	-900	mV
Input Clamp Voltage ~~(~~to V_{DD}~~)~~ 2,	V_{IC2}	-	I_{IN} (Under Test)= 0.1mA $V_{DD}=0V$, V_{SS}=Open All Other Pins Open	400	900	mV
Output Leakage Current Third State, ~~(~~Low Level Applied~~)~~	I_{OZL}	3020	$V_{IN}(\overline{G})=6V$ V_{IN}(Remaining Inputs)=0V $V_{OUT}=0V$ $V_{DD}=6V$, $V_{SS}=0V$	-	-500	nA
Output Leakage Current Third State, ~~(~~High Level Applied~~)~~	I_{OZH}	3021	$V_{IN}(\overline{G})=6V$ V_{IN}(Remaining Inputs)=0V $V_{OUT}=6V$ $V_{DD}=6V$, $V_{SS}=0V$	-	500	nA
Input Capacitance	C_{IN}	3012	V_{IN} (Not Under Test)=0V $V_{DD}=V_{SS}=0V$ f = 100 kHz to 1 MHz Note 4	-	10	pF
Propagation Delay Low to High 1, SRCLK to QH'	t_{PLH1}	3003	V_{IN}=Pulse Generator V_{IN} (Remaining Inputs) per Truth table $V_{DD}=4.5V$, $V_{SS}=0V$ Note 5	-	32	ns
Propagation Delay High to Low 1, SRCLK to QH'	t_{PHL1}	3003	V_{IN}=Pulse Generator V_{IN} (Remaining Inputs) per Truth table $V_{DD}=4.5V$, $V_{SS}=0V$ Note 5	-	32	ns

$V_{IL}=0V$, $V_{IH}=5V$

Characteristics	Symbols	MIL-STD-883 Test Method	Test Conditions Note 1	Limits		Units
				Min	Max	
Propagation Delay Low to High 2, RCLK to QH	t_{PLH2}	3003	V_{IN}=Pulse Generator V_{IN} (Remaining Inputs) per Truth table V_{DD}=4.5V, V_{SS}=0V Note 5	-	35	ns
Propagation Delay High to Low 2, RCLK to QH	t_{PHL2}	3003	V_{IN}=Pulse Generator V_{IN} (Remaining Inputs) per Truth table V_{DD}=4.5V, V_{SS}=0V Note 5	-	35	ns
Propagation Delay High to Low 3, $\overline{SRCLR}$ to QH'	t_{PHL3}	3003	V_{IN}=Pulse Generator V_{IN} (Remaining Inputs) per Truth table V_{DD}=4.5V, V_{SS}=0V Note 5	-	35	ns
Transition Time Low to High 1, QH'	t_{TLH1}	3004	V_{IN}=Pulse Generator V_{IN} (Remaining Inputs) per Truth table V_{DD}=4.5V, V_{SS}=0V Note 5	-	15	ns
Transition Time High to Low 1, QH'	t_{THL1}	3004	V_{IN}=Pulse Generator V_{IN} (Remaining Inputs) per Truth table V_{DD}=4.5V, V_{SS}=0V Note 5	-	15	ns
Transition Time Low to High 2, QH	t_{TLH2}	3004	V_{IN}=Pulse Generator V_{IN} (Remaining Inputs) per Truth table V_{DD}=4.5V, V_{SS}=0V Note 5	-	12	ns
Transition Time High to Low 2, QH	t_{THL2}	3004	V_{IN}=Pulse Generator V_{IN} (Remaining Inputs) per Truth table V_{DD}=4.5V, V_{SS}=0V Note 5	-	12	ns
Output Enable Time High Impedance to Low Output, $\overline{G}$ to QA	t_{PZL}	3003	V_{IN}=Pulse Generator V_{IN} (Remaining Inputs) =0V V_{DD}=4.5V, V_{SS}=0V Note 5	-	30	ns
Output Enable Time High Impedance to High Output, $\overline{G}$ to QA	t_{PZH}	3003	V_{IN}=Pulse Generator V_{IN} (Remaining Inputs) =0V V_{DD}=4.5V, V_{SS}=0V Note 5	-	30	ns

QH'

etc

* V_{IL}=0V, V_{IH}=5V

$V_{IL}=0V$, $V_{IH}=5V$

Characteristics	Symbols	MIL-STD-883 Test Method	Test Conditions Note 1	Limits		Units
				Min	Max	
Output Disable Time Low Output to High Impedance, $\overline{G}$ to QA	t_{PLZ}	3003	V_{IN}=Pulse Generator V_{IN} (Remaining Inputs) per Truth Table V_{DD}=4.5V, V_{SS}=0V Note 5	-	40	ns
Output Disable Time High Output to High Impedance, $\overline{G}$ to A	t_{PHZ}	3003	V_{IN}=Pulse Generator V_{IN} (Remaining Inputs) per Truth Table V_{DD}=4.5V, V_{SS}=0V Note 5	-	40	ns
Maximum Clock Frequency	~~$f_{(CLK)}$~~ f_{CLK}	-	SRCLK = RCLK = Pulse Generator V_{DD}=4.5V, V_{SS}=0V Notes 6, 7	30	-	MHz

2.3.2 High and Low Temperatures Electrical Measurements

The measurements shall be performed at T_{amb}=+125 (+0 -5) °C and T_{amb}=- 55(+5-0)°C.

Characteristics	Symbols	MIL-STD-883 Test Method	Test Conditions Note 1	Limits		Units
				Min	Max	
Functional Test 1	-	3014	Verify Truth Table without Load V_{IL}=0.3V,V_{IH}=1.5V V_{DD}=2V,V_{SS}=0V t_r<1µs, Note 2	-	-	-
Functional Test 2	-	3014	Verify Truth Table without Load V_{IL}=0.9V,V_{IH}=3.15V V_{DD}=4.5V,V_{SS}=0V t_r=t_f<500ns Note 2	-	-	-
Functional Test 3	-	3014	Verify Truth Table without Load V_{IL}=1.2V,V_{IH}=4.2V V_{DD}=6V,V_{SS}=0V t_r=t_f<400ns Note 2	-	-	-
Quiescent Current	I_{DD}	3005	V_{IL}=0V,V_{IH}=6V V_{DD}=6V,V_{SS}=0V All Outputs Open Note 3	-	8	µA
Low Level Input Current	I_{IL}	3009	V_{IN} (Under Test)=0V V_{IN} (Remaining Inputs)=6V V_{DD}=6V,V_{SS}=0V	-	-1	µA

Characteristics	Symbols	MIL-STD-883 Test Method	Test Conditions Note 1	Limits		Units
				Min	Max	
High Level Input Current	I_{IH}	3010	V_{IN} (Under Test)=6V V_{IN} (Remaining Inputs)=0V V_{DD}=6V,V_{SS}=0V	-	1	µA
Low Level Output Voltage 1	V_{OL1}	3007	V_{IL}=0.3V, V_{IH}=1.5V, I_{OL}=20µA V_{DD}=2V, V_{SS}=0V	-	100	mV
Low Level Output Voltage 2	V_{OL2}	3007	V_{IL}=0.9V, V_{IH}=3.15V, I_{OL}=20µA V_{DD}=4.5V, V_{SS}=0V	-	100	mV
Low Level Output Voltage 3	V_{OL3}	3007	V_{IL}=1.2V, V_{IH}=4.2V, I_{OL}=20µA V_{DD}=6V, V_{SS}=0V	-	100	mV
Low Level Output Voltage 4,	V_{OL4}	3007	V_{IL}=0.9V, V_{IH}=3.15V, I_{OL}=6mA V_{DD}=4.5V, V_{SS}=0V	-	400	mV
Low Level Output Voltage 5,	V_{OL5}	3007	V_{IL}=1.2V, V_{IH}=4.2V, I_{OL}=7.8mA V_{DD}=6V, V_{SS}=0V	-	400	mV
High Level Output Voltage 1	V_{OH1}	3006	V_{IL}=0.3V, V_{IH}=1.5V, I_{OH}=-20µA V_{DD}=2V, V_{SS}=0V	1.9	-	V
High Level Output Voltage 2	V_{OH2}	3006	V_{IL}=0.9V, V_{IH}=3.15V, I_{OH}=-20µA V_{DD}=4.5V, V_{SS}=0V	4.4	-	V
High Level Output Voltage 3	V_{OH3}	3006	V_{IL}=1.2V, V_{IH}=4.2V, I_{OH}=-20µA V_{DD}=6V, V_{SS}=0V	5.9	-	V
High Level Output Voltage 4,	V_{OH4}	3006	V_{IL}=0.9V, V_{IH}=3.15V, I_{OH}=-6mA V_{DD}=4.5V, V_{SS}=0V	3.7	-	V
High Level Output Voltage 5,	V_{OH5}	3006	V_{IL}=1.2V, V_{IH}=4.2V, I_{OH}=-7.8mA V_{DD}=6V, V_{SS}=0V	5.2	-	V
Input Clamp Voltage (to V_{SS})	V_{IC1}	-	I_{IN} (Under Test)= -0.1mA V_{DD}=Open, V_{SS}=0V All Other Pins Open	-0.1	-1.2	V
Input Clamp Voltage (to V_{DD})	V_{IC2}	-	I_{IN} (Under Test)= 0.1mA V_{DD}=0V, V_{SS}=Open All Other Pins Open	0.1	1.2	V

QA, QB, QC, QD
QE, QF, QG, QH

V_{OL6}, V_{OL7}
as per page 16
with limit: 400mV

QA, QB, QC, QD
QE, QF, QG, QH

V_{OH6}, V_{OH7}
as per page 17
with limit
V_{OH6} = 3.7V
V_{OH7} = 5.2V

Characteristics	Symbols	MIL-STD-883 Test Method	Test Conditions Note 1	Limits		Units
				Min	Max	
Output Leakage Current Third State Low Level Applied	I_{OZL}	3020	$V_{IN}(\overline{G})$=6V V_{IN}(Remaining Inputs)=0V V_{OUT}=0V V_{DD}=6V, V_{SS}=0V	-	-10	µA
Output Leakage Current Third State High Level Applied	I_{OZH}	3021	$V_{IN}(\overline{G})$=6V V_{IN}(Remaining Inputs)=0V V_{OUT}=6V V_{DD}=6V, V_{SS}=0V	-	10	µA

2.3.3 Notes to Electrical Measurement Tables

1. Unless otherwise specified all inputs and outputs shall be tested for each characteristic, inputs not under test shall be V_{IN}=0V$_{SS}$ or V_{DD} and outputs not under test shall be open.
2. Functional tests shall be performed with f = 10 kHz (min). The Maximum time to output comparator strobe=30µs.
3. Quiescent Current shall be tested using the following input conditions:
   (a) All inputs = V_{IL}
   (b) $\overline{G}$ = V_{IL} ; $\overline{SRCLR}$ = SER = V_{IH} ; SRCLK = RCLK = 9 low to high transitions to configure the outputs to a high level.
4. Guaranteed but not tested.
5. Measurements shall be performed as a go-no-go test on a 100% basis. Read and record measurements shall be performed on a sample of 5 components.
   The pulse generator shall have the following characteristics:
   V_{GEN} = 0 to V_{DD}; f = 1 MHz minimum; t_r and $t_f \leq$ 6 ns (10% to 90%); duty cycle = 50%; Z_{out} = 50Ω
   Output load capacitance C_L = 50pF ± 5% including scope probe, wiring and stray capacitance without component in the test fixture and output load resistance R_L = 1kΩ ± 5%.
   Propagation delay and transition time shall be measured as follows:

PARAMETER	R_L	C_L	S1	S2
t_{PZH}	1 kΩ	50pF	OPEN	CLOSED
t_{PZL}			CLOSED	OPEN
t_{PHZ}	1 kΩ	50pF	OPEN	CLOSED
t_{PLZ}			CLOSED	OPEN
t_{PHL}, t_{PLH}, t_{THL}, t_{TLH}	-	50pF	OPEN	OPEN

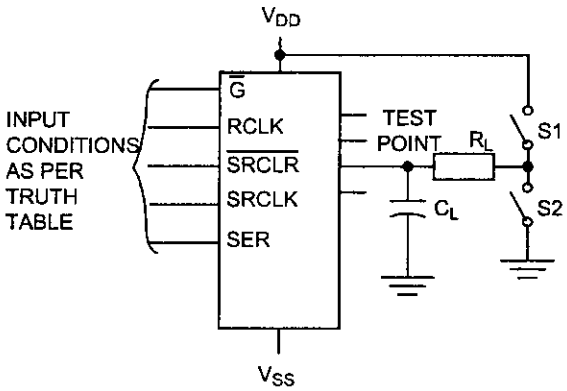

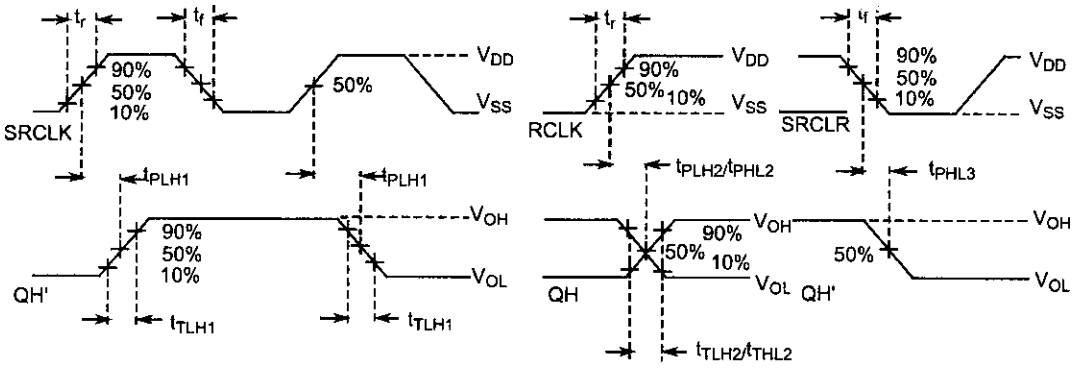

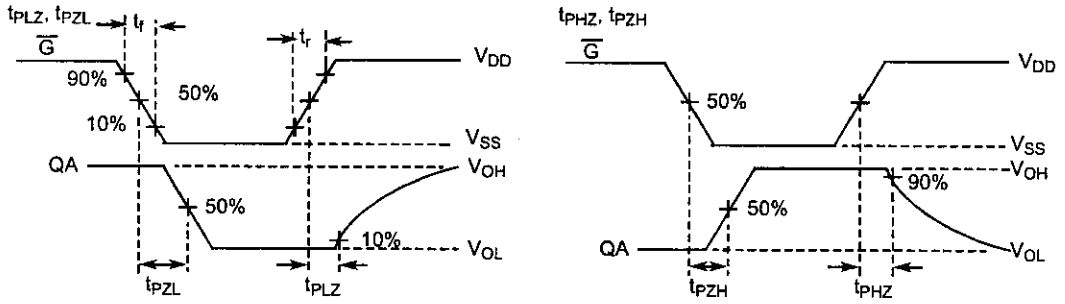

6. Read and record measurements shall be made on a sample of 5 components with 0 failures permitted.
7. A pulse, having the following conditions, shall be applied to the ~~clock~~ inputs SRCLK and RCLK:
   V_P = 0V to V_{DD} ~~Vdd~~.

   Maximum Clock frequency ~~$f_{(CLK)}$~~ f_{CLK} requirement shall be considered as met if proper output state changes occur with the pulse repetition rate set to that given in the ~~"Limits"~~ Limits column.

2.4 PARAMETER DRIFT VALUES

Unless otherwise specified, the measurements shall be performed at T_{amb} =+22±3°C.

The test methods and test conditions shall be as per the corresponding test defined in ~~Electrical Measurements at~~ Room Temperature, Electrical Measurements.

The drift values (Δ) shall not be exceeded for each characteristic specified. The corresponding absolute limit values for each characteristic shall not be exceeded.

Characteristics	Symbols	Limits			Units
		Drift Value Δ	Absolute		
			Min	Max	
Quiescent Current	I_{DD}	±120	-	400	nA
Low Level Input Current	I_{IL}	±20	-	-50	nA
High Level Input Current	I_{IH}	±20	-	50	nA
Low Level Output Voltage 4	V_{OL4}	±26	-	260	mV
High Level Output Voltage 4	V_{OH4}	±0.2	3.98	-	V
Threshold Voltage N-Channel	V_{THN}	±0.3	-0.45	-1.45	V
Threshold Voltage P-Channel	V_{THP}	±0.3	0.45	1.35	V

V_{OL6} →

V_{OH6} →

NOTES:

1. Unless otherwise specified all inputs and outputs shall be tested for each characteristic.

2.5 INTERMEDIATE AND END-POINT ELECTRICAL MEASUREMENTS

Unless otherwise specified, the measurements shall be performed at T_{amb} =+22±3°C.

The test methods and test conditions shall be as per the corresponding test defined in ~~Electrical Measurements at~~ Room Temperature, Electrical Measurements.

The drift values (Δ) shall not be exceeded for each characteristic where specified. The corresponding absolute limit values for each characteristic shall not be exceeded.

Low Level Output Voltage 6	V_{OL6}	±26	-	260	mV
High Level Output Voltage 6	V_{OH6}	±0.2	3.98	-	V

Characteristics	Symbols	Limits			Units
		Drift Value Δ	Absolute		
			Min	Max	
Functional Test 1	-	-	-	-	-
Functional Test 2	-	-	-	-	-
Functional Test 3	-	-	-	-	-
Quiescent Current	I_{DD}	±120	-	400	nA
Low Level Input Current	I_{IL}	±20	-	-50	nA
High Level Input Current	I_{IH}	±20	-	50	nA
Low Level Output Voltage 4	V_{OL4}	±26	-	260	mV
Low Level Output Voltage 5	V_{OL5}	±26	-	260	mV
High Level Output Voltage 4	V_{OH4}	±0.2	3.98	-	V
High Level Output Voltage 5	V_{OH5}	±0.2	5.48	-	V
Threshold Voltage N-Channel	V_{THN}	±0.3	-0.45	-1.45	V
Threshold Voltage P-Channel	V_{THP}	±0.3	0.45	1.35	V
Output Leakage Current Third State, {Low Level Applied}	I_{OZL}	±200	-	-500	nA
Output Leakage Current Third State, {High Level Applied}	I_{OZH}	±200	-	500	nA

V_{OL6}, V_{OL7} →

V_{OH6}, V_{OH7} →

NOTES:

1. Unless otherwise specified all inputs and outputs shall be tested for each characteristic.
2. The drift values (Δ) are applicable to the Operating Life test only.

Low Level Output Voltage 6	V_{OL6}	±26	–	260	mV
Low Level Output Voltage 7	V_{OL7}	±26	–	260	mV
High Level Output Voltage 6	V_{OH6}	±0.2	3.98	–	V
High Level Output Voltage 7	V_{OH7}	±0.2	5.48	–	V

2.6 HIGH TEMPERATURE REVERSE BIAS BURN-IN CONDITIONS

2.6.1 N-Channel HTRB

Characteristics	Symbols	Test Conditions	Units
Ambient Temperature	T_{amb}	+125 (+0 -5)	°C
Outputs QA, QB, QC, QD, QE, QF, QG, QH, QH'	V_{OUT}	Open or V_{SS}	•V
Inputs $\overline{SRCLR}$, SRCLK, RCLK, $\overline{G}$, SER	V_{IN}	V_{SS}	V
Positive Supply Voltage	V_{DD}	6 (+0 -0.5)	V
Negative Supply Voltage	V_{SS}	0	V
Duration	t	72	Hours

NOTES:

1. Input Protection Resistor = 680Ω min to 47kΩ max.
2. Output Load = 1kΩ min to 10kΩ max.

2.6.2 P-Channel HTRB

Characteristics	Symbols	Test Conditions	Units
Ambient Temperature	T_{amb}	+125 (+0 -5)	°C
Outputs QA, QB, QC, QD, QE, QF, QG, QH, QH'	V_{OUT}	Open or V_{DD}	•V
Inputs $\overline{SRCLR}$, SRCLK, RCLK, $\overline{G}$, SER	V_{IN}	V_{DD}	V
Positive Supply Voltage	V_{DD}	6 (+0 -0.5)	V
Negative Supply Voltage	V_{SS}	0	V
Duration	t	72	Hours

NOTES:

1. Input Protection Resistor = 680Ω min to 47kΩ max.
2. Output Load = 1kΩ min to 10kΩ max.

2.7 POWER BURN-IN CONDITIONS

Characteristics	Symbols	Test Conditions	Units
Ambient Temperature	T_{amb}	+125 (+0 -5)	°C
Outputs QA, QB, QC, QD, QE, QF, QG, QH, QH'	V_{OUT}	V_{DD}	V
Inputs $\overline{SRCLR}$, SER	V_{IN}	V_{DD}	V
Inputs SRCLK, RCLK	V_{IN}	V_{GEN1}	V
Input $\overline{G}$	V_{IN}	V_{GEN2}	V
Pulse Voltage	V_{GEN}	0V to V_{DD}	V
Pulse Frequency Square Wave	f_{GEN1} f_{GEN2}	100k ± 10% 50k ± 10% 50 ± 15% Duty Cycle t_r=t_f≤400ns	Hz
Positive Supply Voltage	V_{DD}	6 (+0 -0.5)	V
Negative Supply Voltage	V_{SS}	0	V

NOTES:

1. Input Protection Resistor = 680Ω min to 47kΩ max.
2. Output Load = 1kΩ min to 10kΩ max.

2.8 OPERATING LIFE CONDITIONS

The conditions shall be as specified for Power Burn-in.

2.9 TOTAL DOSE RADIATION TESTING

2.9.1 Bias Conditions and Total Dose Level for Total Dose Radiation Testing

Continuous bias shall be applied during irradiation testing as specified below.

The total dose level applied shall be as specified in the component type variant information herein or in the Purchase Order.

Characteristics	Symbols	Test Conditions	Units
Ambient Temperature	T_{amb}	+ 22 ± 3	°C
Outputs QA, QB, QC, QD, QE, QF, QG, QH, QH'	V_{OUT}	Open	V
Inputs $\overline{SRCLR}$, $\overline{G}$	V_{IN}	V_{SS}	V
Inputs SRCLK, RCLK, SER	V_{IN}	V_{DD}	V
Positive Supply Voltage	V_{DD}	6 ± 0.3	V
Negative Supply Voltage	V_{SS}	0	V

NOTES:

1. Input Protection Resistor = 680Ω min to 47kΩ max.

2.9.2 Electrical Measurements for Total Dose Radiation Testing

Prior to irradiation testing the devices shall have successfully met Room Temperature Electrical Measurements specified herein.

Unless otherwise stated the measurements shall be performed at T_{amb} = +22 ± 3 °C.
The test methods and test conditions shall be as per the corresponding test defined in ~~Electrical Measurements at~~ Room Temperature, Electrical Measurements.

The parameters to be measured during and on completion of irradiation testing are shown below.

Unless otherwise specified all inputs and outputs shall be tested for each characteristic.

Characteristics	Symbols	Limits			Units
		Drift Values Δ	Absolute		
			Min	Max	
Quiescent Current	I_{DD}	-	-	40	µA
Threshold Voltage N-Channel	V_{THN}	±0.6	-0.4	-1.5	V
Threshold Voltage P-Channel	V_{THP}	±0.6	0.4	1.4	V

APPENDIX 'A'

AGREED DEVIATIONS FOR STMICROELECTRONICS (F)

ITEMS AFFECTED	DESCRIPTION OF DEVIATIONS
Deviations from Screening Tests - Chart F3	External Visual Inspection: The criteria applicable to chip out are those described in MIL-STD-883, Test Method 2009, Paras 3.3.6(b) and 3.3.7(a). High Temperature Reverse Bias Burn-in: The temperature limits of MIL-STD-883, Para. 4.5.8(c) may be used. Power Burn-in test is performed using STMicroelectronics Specification Ref: 0019255.
Deviations from Qualification and Periodic Tests - Chart F4	External Visual Inspection: The criteria applicable to chip out are those described in MIL-STD-883, Test Method 2009, Paras 3.3.6(b) and 3.3.7(a). Operating Life: The temperature limits of MIL-STD-883, Para. 4.5.8(c) may be used.
Deviations from ~~Electrical Measurements at~~ High and Low Temperatures Electrical Measurements	~~Electrical Measurements at~~ High and Low Temperatures Electrical Measurement may be considered guaranteed but not tested if successful pilot lot testing has been performed on the wafer lot which includes High and Low Temperature Electrical Measurements per the detail specification. A summary of the pilot lot testing shall be provided if required by the Purchase Order.
Deviations from Room Temperature Electrical Measurements	All AC characteristics (Capacitance and Timings) may be considered guaranteed but not tested if successful pilot lot testing has been performed on the wafer lot which includes AC characteristic measurements per the detail specification. A summary of the pilot lot testing shall be provided if required by the Purchase Order.

MARK-UP PER DCR.
S. Thacker.

ESCC
European Space Components Coordination

Pages 1 to 28

INTEGRATED CIRCUITS, SILICON MONOLITHIC, HCMOS

8-BIT SHIFT REGISTER WITH 3-STATE OUTPUT REGISTER

BASED ON TYPE 54HC595

ESCC Detail Specification No. 9306/051

Issue ~~2~~ 3	~~October 2003~~ September 2004

esa

Document Custodian: European Space Agency - see https://escies.org

LEGAL DISCLAIMER AND COPYRIGHT

European Space Agency, Copyright © ~~2003~~ 2004. All rights reserved.

The European Space Agency disclaims any liability or responsibility, to any person or entity, with respect to any loss or damage caused, or alleged to be caused, directly or indirectly by the use and application of this ESCC publication.

This publication, without the prior permission of the European Space Agency and provided that it is not used for a commercial purpose, may be:

- copied in whole, in any medium, without alteration or modification.
- copied in part, in any medium, provided that the ESCC document identification, comprising the ESCC symbol, document number and document issue, is removed.

DOCUMENTATION CHANGE NOTICE

(Refer to https://escies.org for ESCC DCR content)

DCR No.	CHANGE DESCRIPTION
~~48~~	Specification upissued to incorporate editorial and technical changes per DCR.

per allocated DCR No.

1. GENERAL

1.1 SCOPE

This specification details the ratings, physical and electrical characteristics and test and inspection data for the component type variants and/or the range of components specified below. It supplements the requirements of, and shall be read in conjunction with, the ESCC Generic Specification listed under Applicable Documents.

1.2 APPLICABLE DOCUMENTS

The following documents form part of this specification and shall be read in conjunction with it:

(a) ESCC Generic Specification No. 9000.
(b) MIL-STD-883, Test Methods and Procedures for Microelectronics.

1.3 TERMS, DEFINITIONS, ABBREVIATIONS, SYMBOLS AND UNITS

For the purpose of this specification, the terms, definitions, abbreviations, symbols and units specified in ESCC Basic Specification No. 21300 shall apply.

1.4 THE ESCC COMPONENT NUMBER AND COMPONENT TYPE VARIANTS

1.4.1 The ESCC Component Number

The ESCC Component number shall be constituted as follows:

Example: 930605101F

- Detail Specification Reference: 9306051
- Component Type Variant Number: 01 (as required)
- Total Dose Radiation Level Letter: F (as required)

1.4.2 Component Type Variants

The component type variants applicable to this specification are as follows:

Variant Number	Based on Type	Case	Terminal Material and /or Finish	Weight max g	Total Dose Radiation Level Letter
01	54HC595	FP	G2	0.7	F [50kRAD(Si)]
02	54HC595	FP	G4	0.7	F [50kRAD(Si)]
05	54HC595	CCP	2	0.6	F [50kRAD(Si)]
10	54HC595	DIP	G2	2.2	F [50kRAD(Si)]
11	54HC595	DIP	G4	2.2	F [50kRAD(Si)]
12	54HC595	SO	G2	0.7	F [50kRAD(Si)]
13	54HC595	SO	G4	0.7	F [50kRAD(Si)]

The terminal material and/or finish shall be in accordance with the requirements of ESCC Basic Specification No. 23500.

The total dose radiation level letter shall be as defined in ESCC Basic Specification No. 22900. If an alternative radiation test level is specified in the purchase order the letter shall be changed accordingly.

1.5 MAXIMUM RATINGS

The maximum ratings shall not be exceeded at any time during use or storage.

Maximum ratings shall only be exceeded during testing to the extent specified in this specification and when stipulated in Test Methods and Procedures of the applicable ESCC Generic Specification.

Characteristics	Symbols	Maximum Ratings	Units	Remarks
Supply Voltage	V_{DD}	-0.5 to 7	V	Note 1
Input Voltage	V_{IN}	-0.5 to V_{DD} +0.5	V	Notes 1, 2
Output Voltage	V_{OUT}	-0.5 to V_{DD} +0.5	V	Notes 1, 3
Device Power Dissipation (Continuous)	P_D	420	mW	Note 4
Supply Current	I_{DDop}	70	mA	
Operating Temperature Range	T_{op}	-55 to +125	°C	T_{amb}
Storage Temperature Range	T_{stg}	-65 to +150	°C	
Soldering Temperature For FP, DIP and SO For CCP	T_{sol}	 +265 +245	°C	 Note 5 Note 6

NOTES:

1. Device is functional for $2V \leq V_{DD} \leq 6V$.
2. Input current limited to $I_{IC} = \pm 20mA$.
3. Output current limited to $I_{OUT} = \pm 35mA$.
4. The maximum device dissipation is determined by I_{DDop} max (70mA)x6V.
5. Duration 10 seconds maximum at a distance of not less than 1.5mm from the device body and the same terminal shall not be resoldered until 3 minutes have elapsed.
6. Duration 5 seconds maximum and the same terminal shall not be resoldered until 3 minutes have elapsed.

1.6 HANDLING PRECAUTIONS

These devices are susceptible to damage by electrostatic discharge. Therefore, suitable precautions shall be employed for protection during all phases of manufacture, testing, packaging, shipment and any handling.

These components are categorised as Class 2 per ESCC Basic Specification No. 23800 with a Minimum Critical Path Failure Voltage of 2500 Volts.

1.7 PHYSICAL DIMENSIONS AND TERMINAL IDENTIFICATION

Consolidated Notes are given following the case drawings and dimensions.

2. REQUIREMENTS

2.1 GENERAL

The complete requirements for procurement of the components specified herein are as stated in this specification and the applicable ESCC Generic Specification. Permitted deviations from the applicable Generic Specification, applicable to this specification only, are listed below.

Permitted deviations from the applicable Generic Specification and this Detail Specification, formally agreed with specific Manufacturers on the basis that the alternative requirements are equivalent to the ESCC requirement and do not affect the component's reliability, are listed in the appendices attached to this specification.

2.1.1 Deviations from the Generic Specification

None.

2.2 MARKING

The marking shall be in accordance with the requirements of ESCC Basic Specification No. 21700 and as follows.

The information to be marked on the component shall be:

(a) Terminal identification.
(b) The ESCC qualified components symbol (for ESCC qualified components only).
(c) The ESCC Component Number.
(d) Traceability information.

2.3 ELECTRICAL MEASUREMENTS AT ROOM, HIGH AND LOW TEMPERATURES

Electrical measurements shall be performed at room, high and low temperatures. Consolidated Notes are given after the tables.

2.3.1 Room Temperature Electrical Measurements

The measurements shall be performed at T_{amb}=+22 ± 3°C.

Characteristics	Symbols	MIL-STD-883 Test Method	Test Conditions Note 1	Limits		Units
				Min	Max	
Functional Test 1	-	3014	Verify Truth Table without Load V_{IL}=0.3V,V_{IH}=1.5V V_{DD}=2V,V_{SS}=0V t_r<1µs, Note 2	-	-	-
Functional Test 2	-	3014	Verify Truth Table without Load V_{IL}=0.9V,V_{IH}=3.15V V_{DD}=4.5V,V_{SS}=0V t_r=t_f<500ns Note 2	-	-	-

Characteristics	Symbols	MIL-STD-883 Test Method	Test Conditions Note 1	Limits		Units
				Min	Max	
Functional Test 3	-	3014	Verify Truth Table without Load V_{IL}=1.2V,V_{IH}=4.2V V_{DD}=6V,V_{SS}=0V t_r=t_f<400ns Note 2	-	-	-
Quiescent Current	I_{DD}	3005	V_{IL}=0V,V_{IH}=6V V_{DD}=6V,V_{SS}=0V All Outputs Open Note 3	-	400	nA
Low Level Input Current	I_{IL}	3009	V_{IN} (Under Test)=0V V_{IN} (Remaining Inputs)=6V V_{DD}=6V,V_{SS}=0V	-	-50	nA
High Level Input Current	I_{IH}	3010	V_{IN} (Under Test)=6V V_{IN} (Remaining Inputs)=0V V_{DD}=6V,V_{SS}=0V	-	50	nA
Low Level Output Voltage 1	V_{OL1}	3007	V_{IL}=0.3V, V_{IH}=1.5V, I_{OL}=20µA V_{DD}=2V, V_{SS}=0V	-	100	mV
Low Level Output Voltage 2	V_{OL2}	3007	V_{IL}=0.9V, V_{IH}=3.15V, I_{OL}=20µA V_{DD}=4.5V, V_{SS}=0V	-	100	mV
Low Level Output Voltage 3	V_{OL3}	3007	V_{IL}=1.2V, V_{IH}=4.2V, I_{OL}=20µA V_{DD}=6V, V_{SS}=0V	-	100	mV
Low Level Output Voltage 4,	V_{OL4}	3007	V_{IL}=0.9V, V_{IH}=3.15V, I_{OL}=6mA V_{DD}=4.5V, V_{SS}=0V	-	260	mV
Low Level Output Voltage 5,	V_{OL5}	3007	V_{IL}=1.2V, V_{IH}=4.2V, I_{OL}=7.8mA V_{DD}=6V, V_{SS}=0V	-	260	mV
High Level Output Voltage 1	V_{OH1}	3006	V_{IL}=0.3V, V_{IH}=1.5V, I_{OH}=-20µA V_{DD}=2V, V_{SS}=0V	1.9	-	V
High Level Output Voltage 2	V_{OH2}	3006	V_{IL}=0.9V, V_{IH}=3.15V, I_{OH}=-20µA V_{DD}=4.5V, V_{SS}=0V	4.4	-	V
High Level Output Voltage 3	V_{OH3}	3006	V_{IL}=1.2V, V_{IH}=4.2V, I_{OH}=-20µA V_{DD}=6V, V_{SS}=0V	5.9	-	V
High Level Output Voltage 4,	V_{OH4}	3006	V_{IL}=0.9V, V_{IH}=3.15V, I_{OH}=-6mA V_{DD}=4.5V, V_{SS}=0V	3.98	-	V
Low Level Output Voltage 6, QH'	V_{OL6}	3007	V_{IL}=0.9V, V_{IH}=3.15V I_{OL}=4mA V_{DD}=4.5V, V_{SS}=0V	–	260	mV
Low Level Output Voltage 7, QH'	V_{OL7}	3007	V_{IL}=1.2V, V_{IH}=4.2V I_{OL}=5.2mA V_{DD}=6V, V_{SS}=0V	–	260	mV

QA, QB, QC, QD
QE, QF, QG, QH

$V_{OL6,7}$

High Level Output Voltage 6, QH'	V_{OH6}	3006	V_{IL}=0.9V, V_{IH}=3.15V I_{OH}=-4mA V_{DD}=4.5V, V_{SS}=0V	3.98	—	V
High Level Output Voltage 7, QH'	V_{OH7}	3006	V_{IL}=1.2V, V_{IH}=4.2V I_{OH}=-5.2mA V_{DD}=6V, V_{SS}=0V	5.48	—	V

QA, QB, QC, QD
QE, QF, QG, QH

$V_{OH6,7}$

Characteristics	Symbols	MIL-STD-883 Test Method	Test Conditions Note 1	Limits		Units
				Min	Max	
High Level Output Voltage 5	V_{OH5}	3006	V_{IL}=1.2V, V_{IH}=4.2V, I_{OH}=-7.8mA V_{DD}=6V, V_{SS}=0V	5.48	-	V
Threshold Voltage N-Channel	V_{THN}	-	$\overline{G}$ Input at Ground All Other Inputs: V_{IN}=5V V_{DD}=5V, I_{SS}=-10µA	-0.45	-1.45	V
Threshold Voltage P-Channel	V_{THP}	-	$\overline{G}$ Input at Ground All Other Inputs: V_{IN}=-5V V_{SS}=-5V, I_{DD}=10µA	0.45	1.35	V
Input Clamp Voltage ~~(~~to V_{SS}~~)~~ 1,	V_{IC1}	-	I_{IN} (Under Test)= -0.1mA V_{DD}=Open, V_{SS}=0V All Other Pins Open	-400	-900	mV
Input Clamp Voltage ~~(~~to V_{DD}~~)~~ 2,	V_{IC2}	-	I_{IN} (Under Test)= 0.1mA V_{DD}=0V, V_{SS}=Open All Other Pins Open	400	900	mV
Output Leakage Current Third State, ~~(~~Low Level Applied~~)~~	I_{OZL}	3020	$V_{IN}(\overline{G})$=6V V_{IN}(Remaining Inputs)=0V V_{OUT}=0V V_{DD}=6V, V_{SS}=0V	-	-500	nA
Output Leakage Current Third State, ~~(~~High Level Applied~~)~~	I_{OZH}	3021	$V_{IN}(\overline{G})$=6V V_{IN}(Remaining Inputs)=0V V_{OUT}=6V V_{DD}=6V, V_{SS}=0V	-	500	nA
Input Capacitance	C_{IN}	3012	V_{IN} (Not Under Test)=0V V_{DD}= V_{SS}=0V f = 100 kHz to 1 MHz Note 4	-	10	pF
Propagation Delay Low to High 1, SRCLK to QH'	t_{PLH1}	3003	V_{IN}=Pulse Generator V_{IN} (Remaining Inputs) per Truth table V_{DD}=4.5V, V_{SS}=0V Note 5	-	32	ns
Propagation Delay High to Low 1, SRCLK to QH'	t_{PHL1}	3003	V_{IN}=Pulse Generator V_{IN} (Remaining Inputs) per Truth table V_{DD}=4.5V, V_{SS}=0V Note 5	-	32	ns

V_{IL}=0V, V_{IH}=4.5V

Characteristics	Symbols	MIL-STD-883 Test Method	Test Conditions Note 1	Limits		Units
				Min	Max	
Propagation Delay Low to High 2, RCLK to QH	t_{PLH2}	3003	V_{IN}=Pulse Generator V_{IN} (Remaining Inputs) per Truth table V_{DD}=4.5V, V_{SS}=0V Note 5	-	35	ns
Propagation Delay High to Low 2, RCLK to QH	t_{PHL2}	3003	V_{IN}=Pulse Generator V_{IN} (Remaining Inputs) per Truth table V_{DD}=4.5V, V_{SS}=0V Note 5	-	35	ns
Propagation Delay High to Low 3, $\overline{SRCLR}$ to QH'	t_{PHL3}	3003	V_{IN}=Pulse Generator V_{IN} (Remaining Inputs) per Truth table V_{DD}=4.5V, V_{SS}=0V Note 5	-	35	ns
Transition Time Low to High 1, QH'	t_{TLH1}	3004	V_{IN}=Pulse Generator V_{IN} (Remaining Inputs) per Truth table V_{DD}=4.5V, V_{SS}=0V Note 5	-	15	ns
Transition Time High to Low 1, QH'	t_{THL1}	3004	V_{IN}=Pulse Generator V_{IN} (Remaining Inputs) per Truth table V_{DD}=4.5V, V_{SS}=0V Note 5	-	15	ns
Transition Time Low to High 2, QH	t_{TLH2}	3004	V_{IN}=Pulse Generator V_{IN} (Remaining Inputs) per Truth table V_{DD}=4.5V, V_{SS}=0V Note 5	-	12	ns
Transition Time High to Low 2, QH	t_{THL2}	3004	V_{IN}=Pulse Generator V_{IN} (Remaining Inputs) per Truth table V_{DD}=4.5V, V_{SS}=0V Note 5	-	12	ns
Output Enable Time High Impedance to Low Output, $\overline{G}$ to QA	t_{PZL}	3003	V_{IN}=Pulse Generator V_{IN} (Remaining Inputs) =0V V_{DD}=4.5V, V_{SS}=0V Note 5	-	30	ns
Output Enable Time High Impedance to High Output, $\overline{G}$ to QA	t_{PZH}	3003	V_{IN}=Pulse Generator V_{IN} (Remaining Inputs) =0V V_{DD}=4.5V, V_{SS}=0V Note 5	-	30	ns

QH'

etc

* V_{IL}=0V, V_{IH}=5V

$V_{IL}=0V$, $V_{IH}=4.5V$

Characteristics	Symbols	MIL-STD-883 Test Method	Test Conditions Note 1	Limits		Units
				Min	Max	
Output Disable Time Low Output to High Impedance, $\overline{G}$ to QA	t_{PLZ}	3003	V_{IN}=Pulse Generator V_{IN} (Remaining Inputs) per Truth Table V_{DD}=4.5V, V_{SS}=0V Note 5	-	40	ns
Output Disable Time High Output to High Impedance, $\overline{G}$ to A	t_{PHZ}	3003	V_{IN}=Pulse Generator V_{IN} (Remaining Inputs) per Truth Table V_{DD}=4.5V, V_{SS}=0V Note 5	-	40	ns
Maximum Clock Frequency	~~$f_{(CLK)}$~~ f_{CLK}	-	SRCLK = RCLK = Pulse Generator V_{DD}=4.5V, V_{SS}=0V Notes 6, 7	30	-	MHz

2.3.2 High and Low Temperatures Electrical Measurements

The measurements shall be performed at T_{amb}=+125 (+0 -5) °C and T_{amb}=- 55(+5-0)°C.

Characteristics	Symbols	MIL-STD-883 Test Method	Test Conditions Note 1	Limits		Units
				Min	Max	
Functional Test 1	-	3014	Verify Truth Table without Load V_{IL}=0.3V,V_{IH}=1.5V V_{DD}=2V,V_{SS}=0V t_r<1µs, Note 2	-	-	-
Functional Test 2	-	3014	Verify Truth Table without Load V_{IL}=0.9V,V_{IH}=3.15V V_{DD}=4.5V,V_{SS}=0V t_r=t_f<500ns Note 2	-	-	-
Functional Test 3	-	3014	Verify Truth Table without Load V_{IL}=1.2V,V_{IH}=4.2V V_{DD}=6V,V_{SS}=0V t_r=t_f<400ns Note 2	-	-	-
Quiescent Current	I_{DD}	3005	V_{IL}=0V,V_{IH}=6V V_{DD}=6V,V_{SS}=0V All Outputs Open Note 3	-	8	µA
Low Level Input Current	I_{IL}	3009	V_{IN} (Under Test)=0V V_{IN} (Remaining Inputs)=6V V_{DD}=6V,V_{SS}=0V	-	-1	µA

Characteristics	Symbols	MIL-STD-883 Test Method	Test Conditions Note 1	Limits		Units
				Min	Max	
High Level Input Current	I_{IH}	3010	V_{IN} (Under Test)=6V V_{IN} (Remaining Inputs)=0V V_{DD}=6V,V_{SS}=0V	-	1	µA
Low Level Output Voltage 1	V_{OL1}	3007	V_{IL}=0.3V, V_{IH}=1.5V, I_{OL}=20µA V_{DD}=2V, V_{SS}=0V	-	100	mV
Low Level Output Voltage 2	V_{OL2}	3007	V_{IL}=0.9V, V_{IH}=3.15V, I_{OL}=20µA V_{DD}=4.5V, V_{SS}=0V	-	100	mV
Low Level Output Voltage 3	V_{OL3}	3007	V_{IL}=1.2V, V_{IH}=4.2V, I_{OL}=20µA V_{DD}=6V, V_{SS}=0V	-	100	mV
Low Level Output Voltage 4,	V_{OL4}	3007	V_{IL}=0.9V, V_{IH}=3.15V, I_{OL}=6mA V_{DD}=4.5V, V_{SS}=0V	-	400	mV
Low Level Output Voltage 5,	V_{OL5}	3007	V_{IL}=1.2V, V_{IH}=4.2V, I_{OL}=7.8mA V_{DD}=6V, V_{SS}=0V	-	400	mV
High Level Output Voltage 1	V_{OH1}	3006	V_{IL}=0.3V, V_{IH}=1.5V, I_{OH}=-20µA V_{DD}=2V, V_{SS}=0V	1.9	-	V
High Level Output Voltage 2	V_{OH2}	3006	V_{IL}=0.9V, V_{IH}=3.15V, I_{OH}=-20µA V_{DD}=4.5V, V_{SS}=0V	4.4	-	V
High Level Output Voltage 3	V_{OH3}	3006	V_{IL}=1.2V, V_{IH}=4.2V, I_{OH}=-20µA V_{DD}=6V, V_{SS}=0V	5.9	-	V
High Level Output Voltage 4,	V_{OH4}	3006	V_{IL}=0.9V, V_{IH}=3.15V, I_{OH}=-6mA V_{DD}=4.5V, V_{SS}=0V	3.7	-	V
High Level Output Voltage 5,	V_{OH5}	3006	V_{IL}=1.2V, V_{IH}=4.2V, I_{OH}=-7.8mA V_{DD}=6V, V_{SS}=0V	5.2	-	V
Input Clamp Voltage (to V_{SS})	V_{IC1}	-	I_{IN} (Under Test)= -0.1mA V_{DD}=Open, V_{SS}=0V All Other Pins Open	-0.1	-1.2	V
Input Clamp Voltage (to V_{DD})	V_{IC2}	-	I_{IN} (Under Test)= 0.1mA V_{DD}=0V, V_{SS}=Open All Other Pins Open	0.1	1.2	V

QA, QB, QC, QD
QE, QF, QG, QH

V_{OL6}, V_{OL7}
as per page 16
with limit: 400mV

QA, QB, QC, QD
QE, QF, QG, QH

V_{OH6}, V_{OH7}
as per page 17
with limit
V_{OH6} = 3.7V
V_{OH7} = 5.2V

Characteristics	Symbols	MIL-STD-883 Test Method	Test Conditions Note 1	Limits		Units
				Min	Max	
Output Leakage Current Third State Low Level Applied	I_{OZL}	3020	$V_{IN}(\overline{G})$=6V V_{IN}(Remaining Inputs)=0V V_{OUT}=0V V_{DD}=6V, V_{SS}=0V	-	-10	µA
Output Leakage Current Third State High Level Applied	I_{OZH}	3021	$V_{IN}(\overline{G})$=6V V_{IN}(Remaining Inputs)=0V V_{OUT}=6V V_{DD}=6V, V_{SS}=0V	-	10	µA

2.3.3 Notes to Electrical Measurement Tables

1. Unless otherwise specified all inputs and outputs shall be tested for each characteristic, inputs not under test shall be V_{IN}=0V$_{SS}$ or V_{DD} and outputs not under test shall be open.
2. Functional tests shall be performed with f = 10 kHz (min). The Maximum time to output comparator strobe=30µs.
3. Quiescent Current shall be tested using the following input conditions:
   (a) All inputs = V_{IL}
   (b) $\overline{G}$ = V_{IL} ; $\overline{SRCLR}$ = SER = V_{IH} ; SRCLK = RCLK = 9 low to high transitions to configure the outputs to a high level.
4. Guaranteed but not tested.
5. Measurements shall be performed as a go-no-go test on a 100% basis. Read and record measurements shall be performed on a sample of 5 components.
   The pulse generator shall have the following characteristics:
   V_{GEN} = 0 to V_{DD}; f = 1 MHz minimum; t_r and $t_f \leq$ 6 ns (10% to 90%); duty cycle = 50%; Z_{out} = 50Ω
   Output load capacitance C_L = 50pF ± 5% including scope probe, wiring and stray capacitance without component in the test fixture and output load resistance R_L = 1kΩ ± 5%.
   Propagation delay and transition time shall be measured as follows:

PARAMETER	R_L	C_L	S1	S2
t_{PZH}	1 kΩ	50pF	OPEN	CLOSED
t_{PZL}			CLOSED	OPEN
t_{PHZ}	1 kΩ	50pF	OPEN	CLOSED
t_{PLZ}			CLOSED	OPEN
t_{PHL}, t_{PLH}, t_{THL}, t_{TLH}	-	50pF	OPEN	OPEN

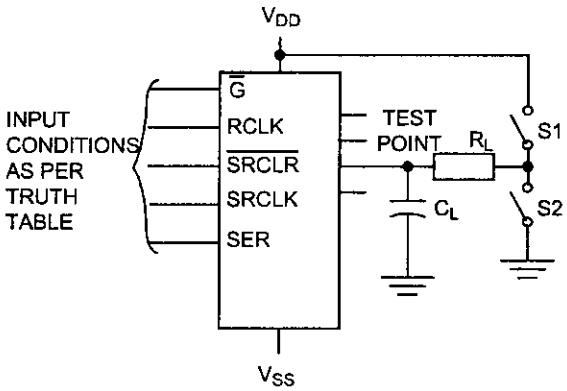

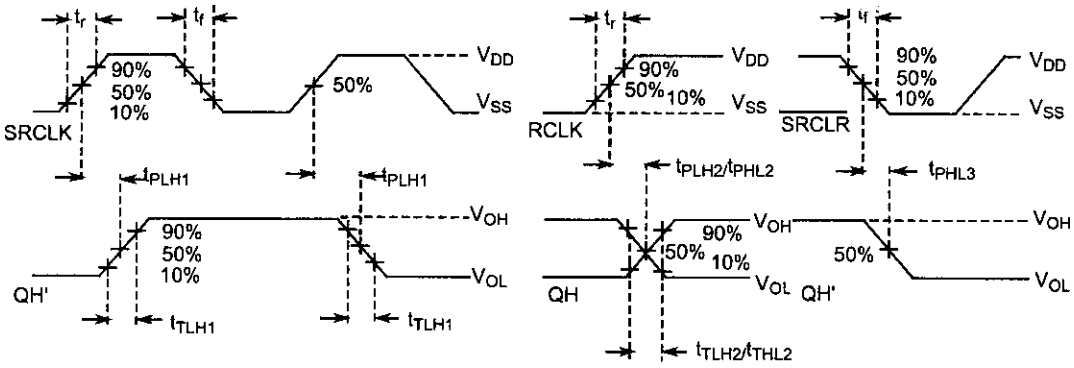

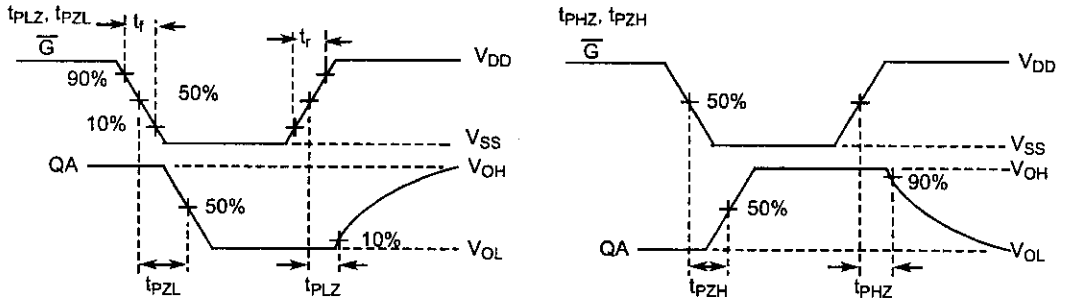

6. Read and record measurements shall be made on a sample of 5 components with 0 failures permitted.
7. A pulse, having the following conditions, shall be applied to the ~~clock~~ inputs SRCLK and RCLK:
   V_P = 0V to V_{DD} ~~Vdd~~.

   Maximum Clock frequency ~~$f_{(CLK)}$~~ f_{CLK} requirement shall be considered as met if proper output state changes occur with the pulse repetition rate set to that given in the ~~"Limits"~~ Limits column.

2.4 PARAMETER DRIFT VALUES

Unless otherwise specified, the measurements shall be performed at T_{amb} =+22±3°C.

The test methods and test conditions shall be as per the corresponding test defined in ~~Electrical Measurements at~~ Room Temperature, Electrical Measurements.

The drift values (Δ) shall not be exceeded for each characteristic specified. The corresponding absolute limit values for each characteristic shall not be exceeded.

Characteristics	Symbols	Limits			Units
		Drift Value Δ	Absolute		
			Min	Max	
Quiescent Current	I_{DD}	±120	-	400	nA
Low Level Input Current	I_{IL}	±20	-	-50	nA
High Level Input Current	I_{IH}	±20	-	50	nA
Low Level Output Voltage 4	V_{OL4}	±26	-	260	mV
High Level Output Voltage 4	V_{OH4}	±0.2	3.98	-	V
Threshold Voltage N-Channel	V_{THN}	±0.3	-0.45	-1.45	V
Threshold Voltage P-Channel	V_{THP}	±0.3	0.45	1.35	V

V_{OL6} →

V_{OH6} →

NOTES:

1. Unless otherwise specified all inputs and outputs shall be tested for each characteristic.

2.5 INTERMEDIATE AND END-POINT ELECTRICAL MEASUREMENTS

Unless otherwise specified, the measurements shall be performed at T_{amb} =+22±3°C.

The test methods and test conditions shall be as per the corresponding test defined in ~~Electrical Measurements at~~ Room Temperature, Electrical Measurements.

The drift values (Δ) shall not be exceeded for each characteristic where specified. The corresponding absolute limit values for each characteristic shall not be exceeded.

Low Level Output Voltage 6	V_{OL6}	±26	-	260	mV
High Level Output Voltage 6	V_{OH6}	±0.2	3.98	-	V

Characteristics	Symbols	Limits			Units
		Drift Value Δ	Absolute		
			Min	Max	
Functional Test 1	-	-	-	-	-
Functional Test 2	-	-	-	-	-
Functional Test 3	-	-	-	-	-
Quiescent Current	I_{DD}	±120	-	400	nA
Low Level Input Current	I_{IL}	±20	-	-50	nA
High Level Input Current	I_{IH}	±20	-	50	nA
Low Level Output Voltage 4	V_{OL4}	±26	-	260	mV
Low Level Output Voltage 5	V_{OL5}	±26	-	260	mV
High Level Output Voltage 4	V_{OH4}	±0.2	3.98	-	V
High Level Output Voltage 5	V_{OH5}	±0.2	5.48	-	V
Threshold Voltage N-Channel	V_{THN}	±0.3	-0.45	-1.45	V
Threshold Voltage P-Channel	V_{THP}	±0.3	0.45	1.35	V
Output Leakage Current Third State, {Low Level Applied}	I_{OZL}	±200	-	-500	nA
Output Leakage Current Third State, {High Level Applied}	I_{OZH}	±200	-	500	nA

V_{OL6}, V_{OL7} →

V_{OH6}, V_{OH7} →

NOTES:

1. Unless otherwise specified all inputs and outputs shall be tested for each characteristic.
2. The drift values (Δ) are applicable to the Operating Life test only.

Low Level Output Voltage 6	V_{OL6}	±26	–	260	mV
Low Level Output Voltage 7	V_{OL7}	±26	–	260	mV
High Level Output Voltage 6	V_{OH6}	±0.2	3.98	–	V
High Level Output Voltage 7	V_{OH7}	±0.2	5.48	–	V

2.6 HIGH TEMPERATURE REVERSE BIAS BURN-IN CONDITIONS

2.6.1 N-Channel HTRB

Characteristics	Symbols	Test Conditions	Units
Ambient Temperature	T_{amb}	+125 (+0 -5)	°C
Outputs QA, QB, QC, QD, QE, QF, QG, QH, QH'	V_{OUT}	Open or V_{SS}	•V
Inputs $\overline{SRCLR}$, SRCLK, RCLK, $\overline{G}$, SER	V_{IN}	V_{SS}	V
Positive Supply Voltage	V_{DD}	6 (+0 -0.5)	V
Negative Supply Voltage	V_{SS}	0	V
Duration	t	72	Hours

NOTES:

1. Input Protection Resistor = 680Ω min to 47kΩ max.
2. Output Load = 1kΩ min to 10kΩ max.

2.6.2 P-Channel HTRB

Characteristics	Symbols	Test Conditions	Units
Ambient Temperature	T_{amb}	+125 (+0 -5)	°C
Outputs QA, QB, QC, QD, QE, QF, QG, QH, QH'	V_{OUT}	Open or V_{DD}	•V
Inputs $\overline{SRCLR}$, SRCLK, RCLK, $\overline{G}$, SER	V_{IN}	V_{DD}	V
Positive Supply Voltage	V_{DD}	6 (+0 -0.5)	V
Negative Supply Voltage	V_{SS}	0	V
Duration	t	72	Hours

NOTES:

1. Input Protection Resistor = 680Ω min to 47kΩ max.
2. Output Load = 1kΩ min to 10kΩ max.

2.7 POWER BURN-IN CONDITIONS

Characteristics	Symbols	Test Conditions	Units
Ambient Temperature	T_{amb}	+125 (+0 -5)	°C
Outputs QA, QB, QC, QD, QE, QF, QG, QH, QH'	V_{OUT}	V_{DD}	V
Inputs $\overline{SRCLR}$, SER	V_{IN}	V_{DD}	V
Inputs SRCLK, RCLK	V_{IN}	V_{GEN1}	V
Input $\overline{G}$	V_{IN}	V_{GEN2}	V
Pulse Voltage	V_{GEN}	0V to V_{DD}	V
Pulse Frequency Square Wave	f_{GEN1} f_{GEN2}	100k ± 10% 50k ± 10% 50 ± 15% Duty Cycle t_r=t_f≤400ns	Hz
Positive Supply Voltage	V_{DD}	6 (+0 -0.5)	V
Negative Supply Voltage	V_{SS}	0	V

NOTES:

1. Input Protection Resistor = 680Ω min to 47kΩ max.
2. Output Load = 1kΩ min to 10kΩ max.

2.8 OPERATING LIFE CONDITIONS

The conditions shall be as specified for Power Burn-in.

2.9 TOTAL DOSE RADIATION TESTING

2.9.1 Bias Conditions and Total Dose Level for Total Dose Radiation Testing

Continuous bias shall be applied during irradiation testing as specified below.

The total dose level applied shall be as specified in the component type variant information herein or in the Purchase Order.

Characteristics	Symbols	Test Conditions	Units
Ambient Temperature	T_{amb}	+ 22 ± 3	°C
Outputs QA, QB, QC, QD, QE, QF, QG, QH, QH'	V_{OUT}	Open	V
Inputs $\overline{SRCLR}$, $\overline{G}$	V_{IN}	V_{SS}	V
Inputs SRCLK, RCLK, SER	V_{IN}	V_{DD}	V
Positive Supply Voltage	V_{DD}	6 ± 0.3	V
Negative Supply Voltage	V_{SS}	0	V

NOTES:

1. Input Protection Resistor = 680Ω min to 47kΩ max.

2.9.2 Electrical Measurements for Total Dose Radiation Testing

Prior to irradiation testing the devices shall have successfully met Room Temperature Electrical Measurements specified herein.

Unless otherwise stated the measurements shall be performed at T_{amb} = +22 ± 3 °C.
The test methods and test conditions shall be as per the corresponding test defined in ~~Electrical Measurements at~~ Room Temperature, Electrical Measurements.

The parameters to be measured during and on completion of irradiation testing are shown below.

Unless otherwise specified all inputs and outputs shall be tested for each characteristic.

Characteristics	Symbols	Limits			Units
		Drift Values Δ	Absolute		
			Min	Max	
Quiescent Current	I_{DD}	-	-	40	µA
Threshold Voltage N-Channel	V_{THN}	±0.6	-0.4	-1.5	V
Threshold Voltage P-Channel	V_{THP}	±0.6	0.4	1.4	V

APPENDIX 'A'

AGREED DEVIATIONS FOR STMICROELECTRONICS (F)

ITEMS AFFECTED	DESCRIPTION OF DEVIATIONS
Deviations from Screening Tests - Chart F3	External Visual Inspection: The criteria applicable to chip out are those described in MIL-STD-883, Test Method 2009, Paras 3.3.6(b) and 3.3.7(a). High Temperature Reverse Bias Burn-in: The temperature limits of MIL-STD-883, Para. 4.5.8(c) may be used. Power Burn-in test is performed using STMicroelectronics Specification Ref: 0019255.
Deviations from Qualification and Periodic Tests - Chart F4	External Visual Inspection: The criteria applicable to chip out are those described in MIL-STD-883, Test Method 2009, Paras 3.3.6(b) and 3.3.7(a). Operating Life: The temperature limits of MIL-STD-883, Para. 4.5.8(c) may be used.
Deviations from ~~Electrical Measurements at~~ High and Low Temperatures Electrical Measurements	~~Electrical Measurements at~~ High and Low Temperatures Electrical Measurement may be considered guaranteed but not tested if successful pilot lot testing has been performed on the wafer lot which includes High and Low Temperature Electrical Measurements per the detail specification. A summary of the pilot lot testing shall be provided if required by the Purchase Order.
Deviations from Room Temperature Electrical Measurements	All AC characteristics (Capacitance and Timings) may be considered guaranteed but not tested if successful pilot lot testing has been performed on the wafer lot which includes AC characteristic measurements per the detail specification. A summary of the pilot lot testing shall be provided if required by the Purchase Order.